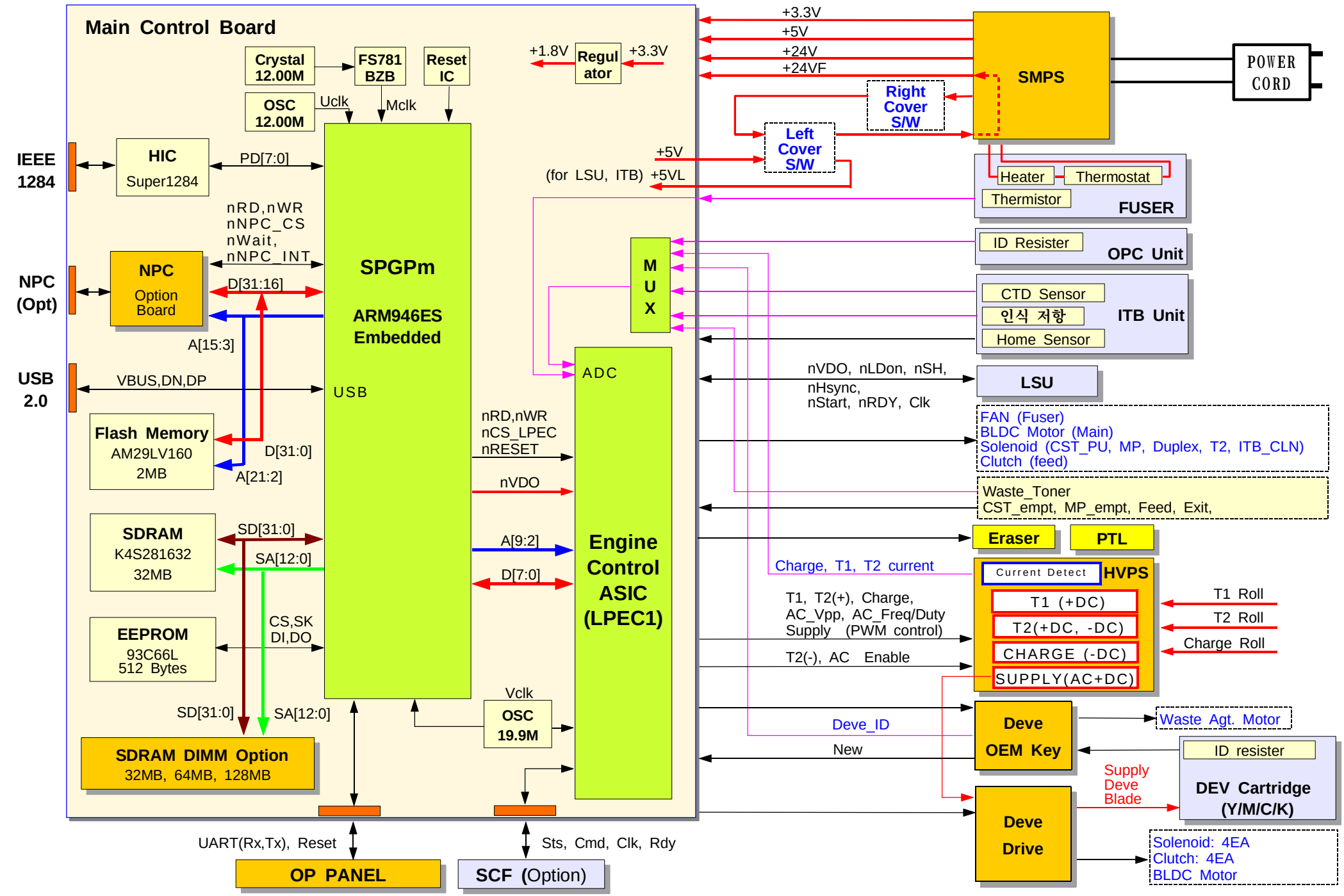BigBang Controller Block Diagram