CLP-660N/ND MAIN Controller Block diagram

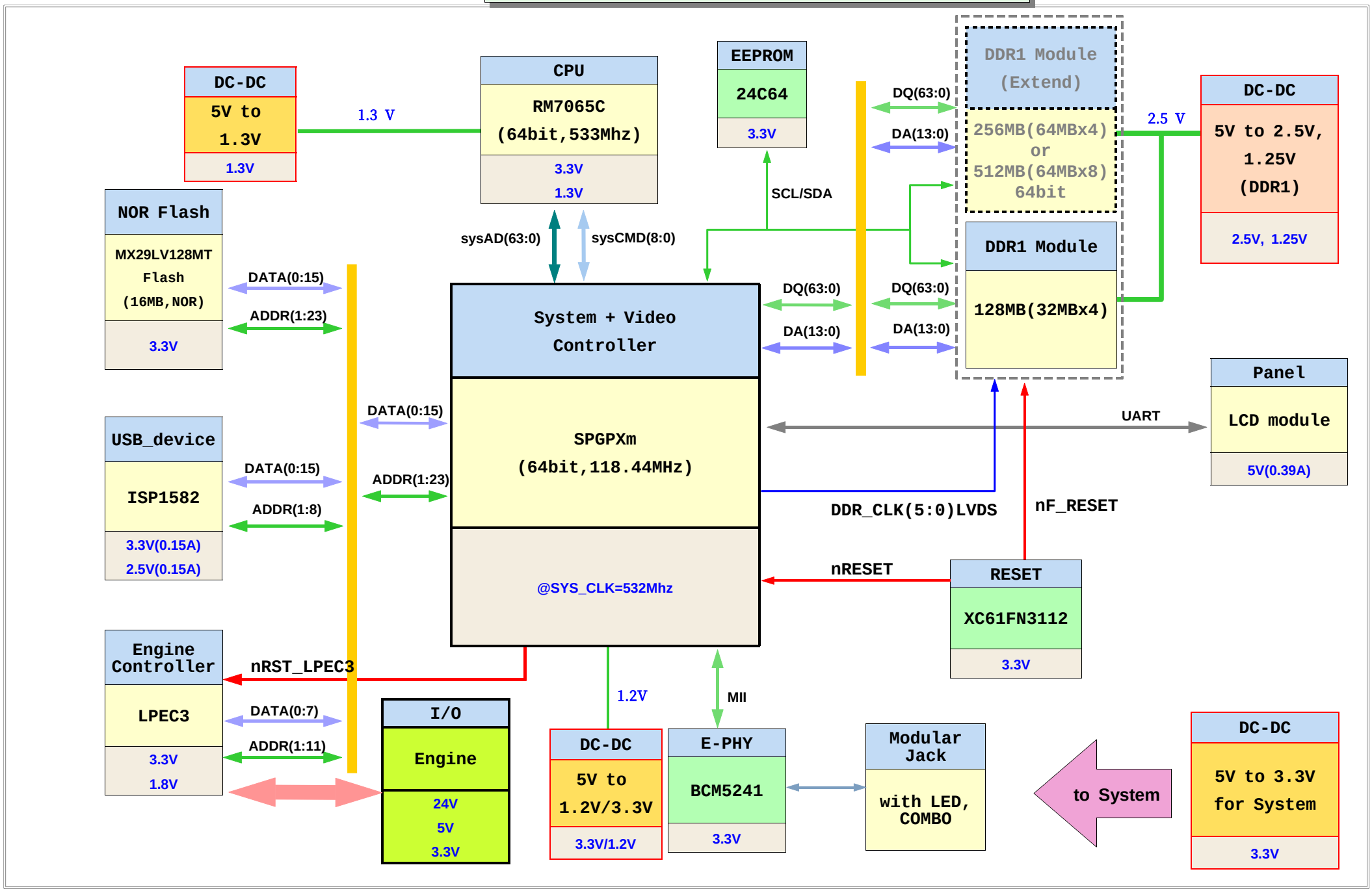

CLP-660N/ND Clock diagram

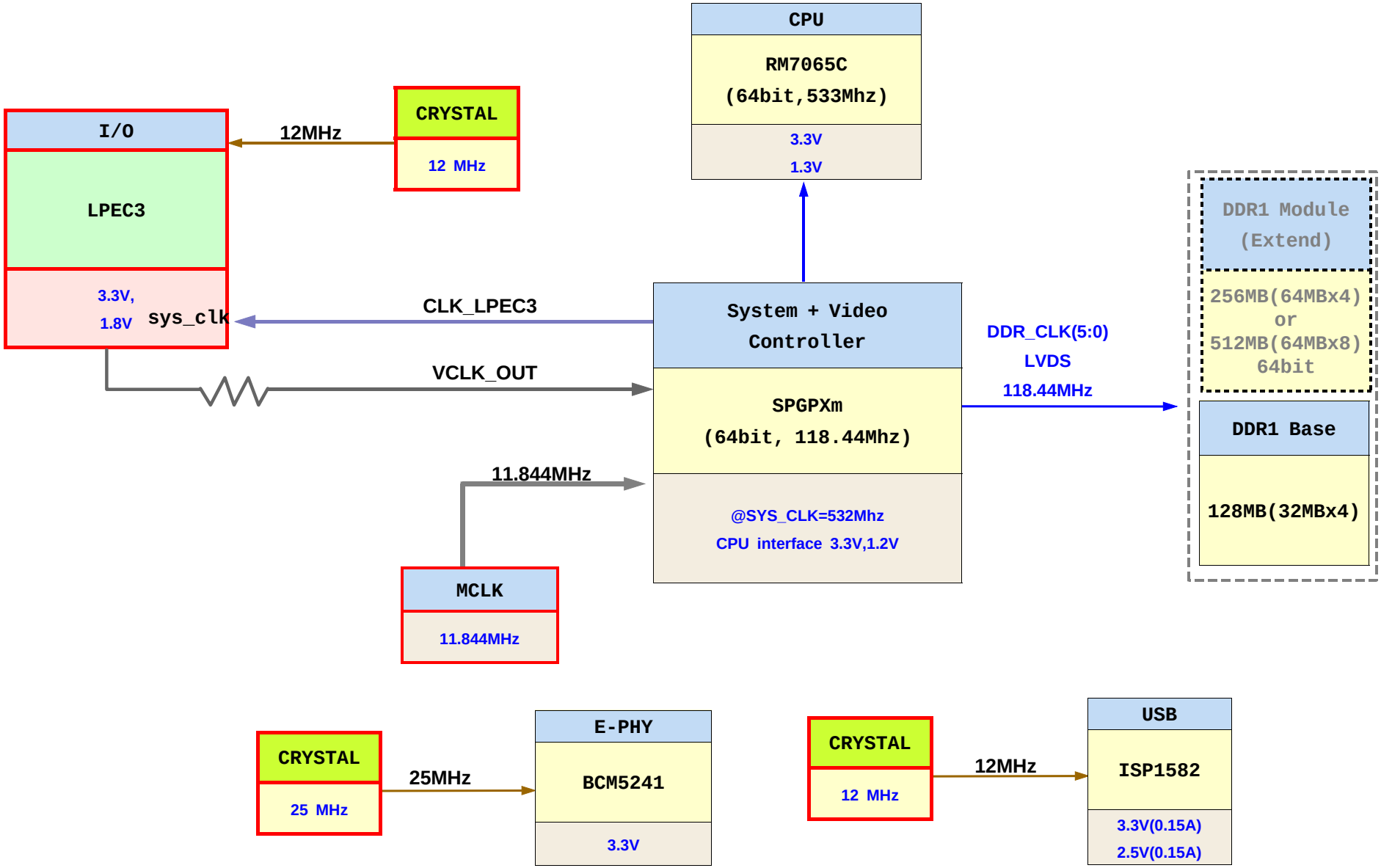
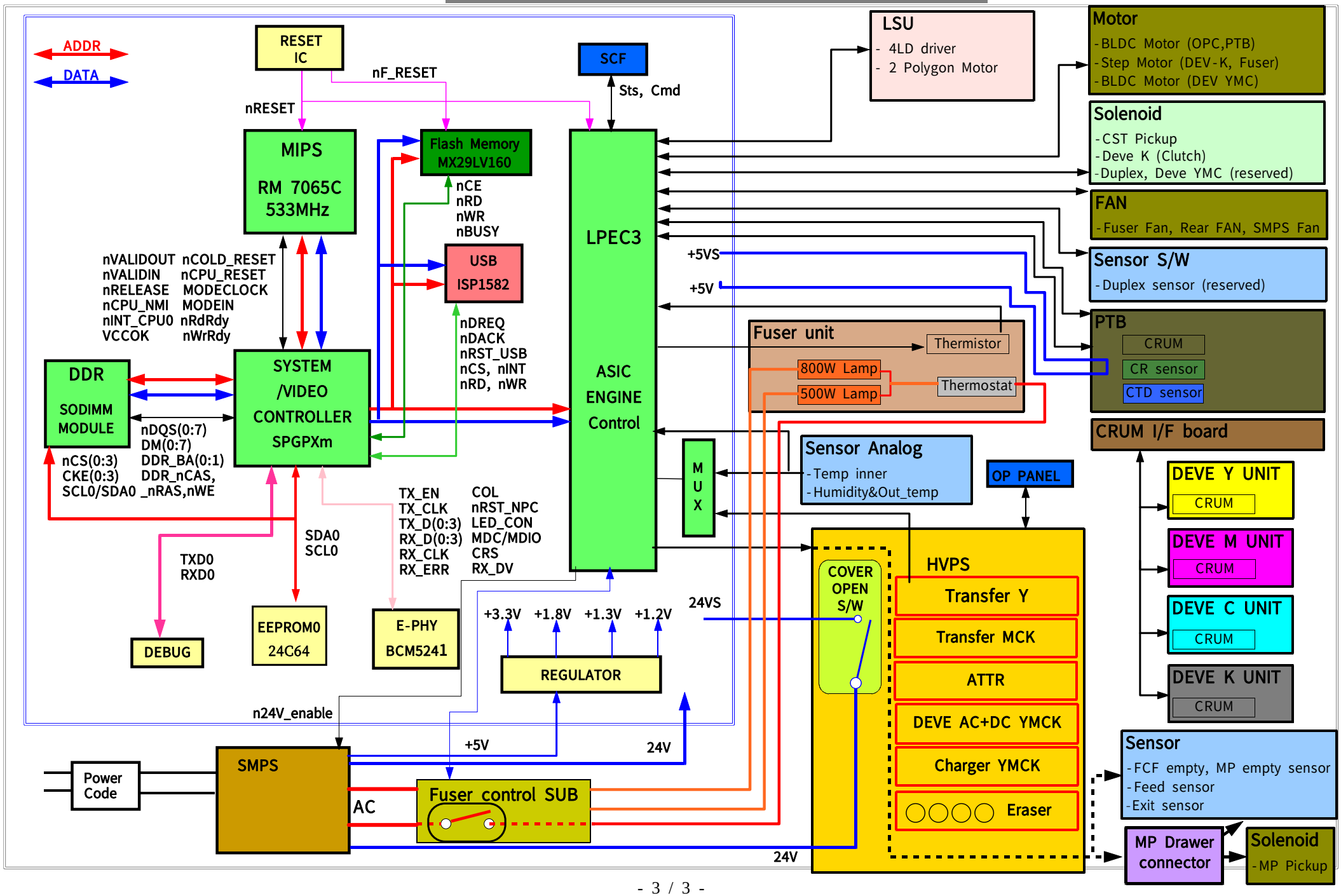
CLP-660N/ND Engine Controller Block diagram