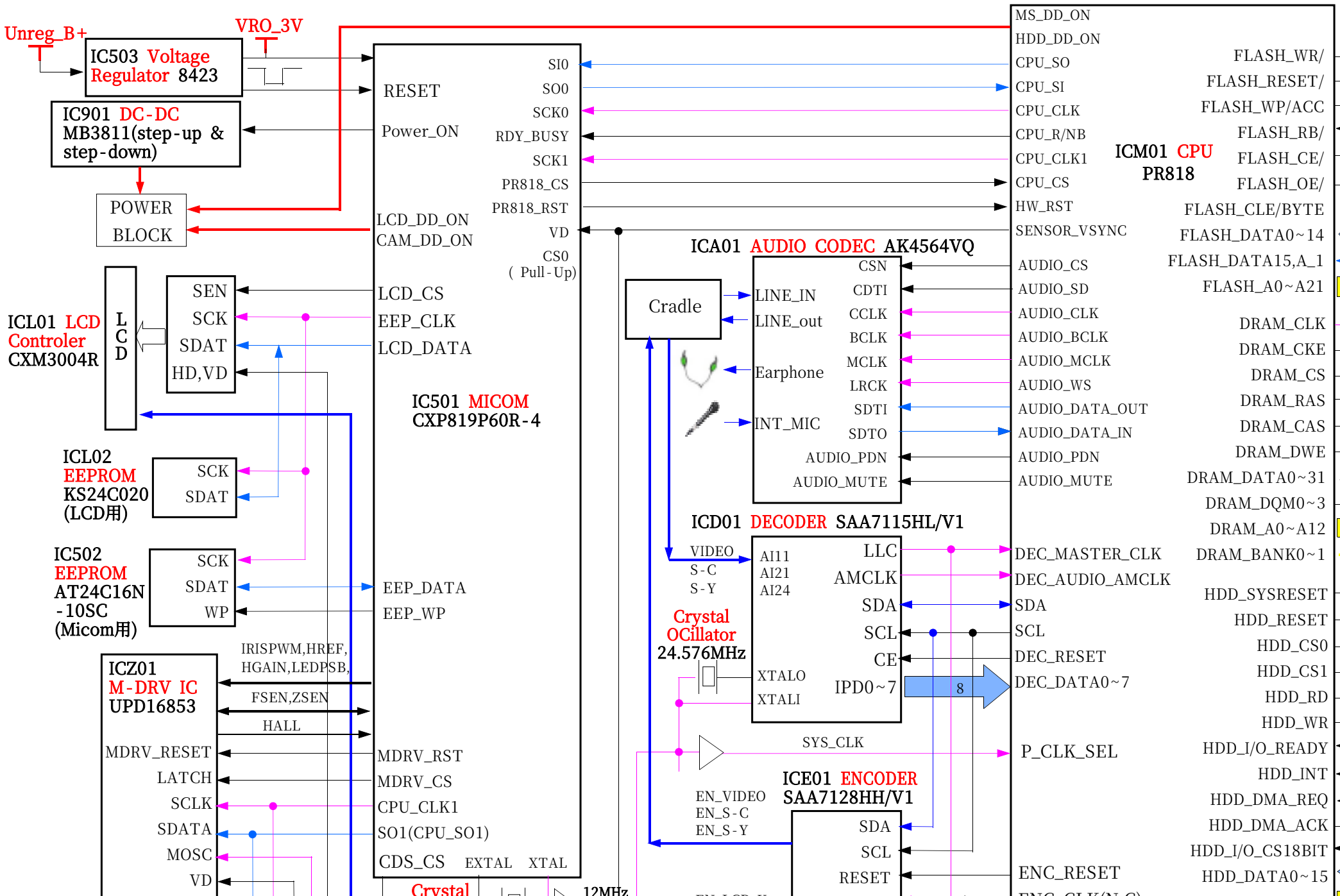LOCK DIAGRAM