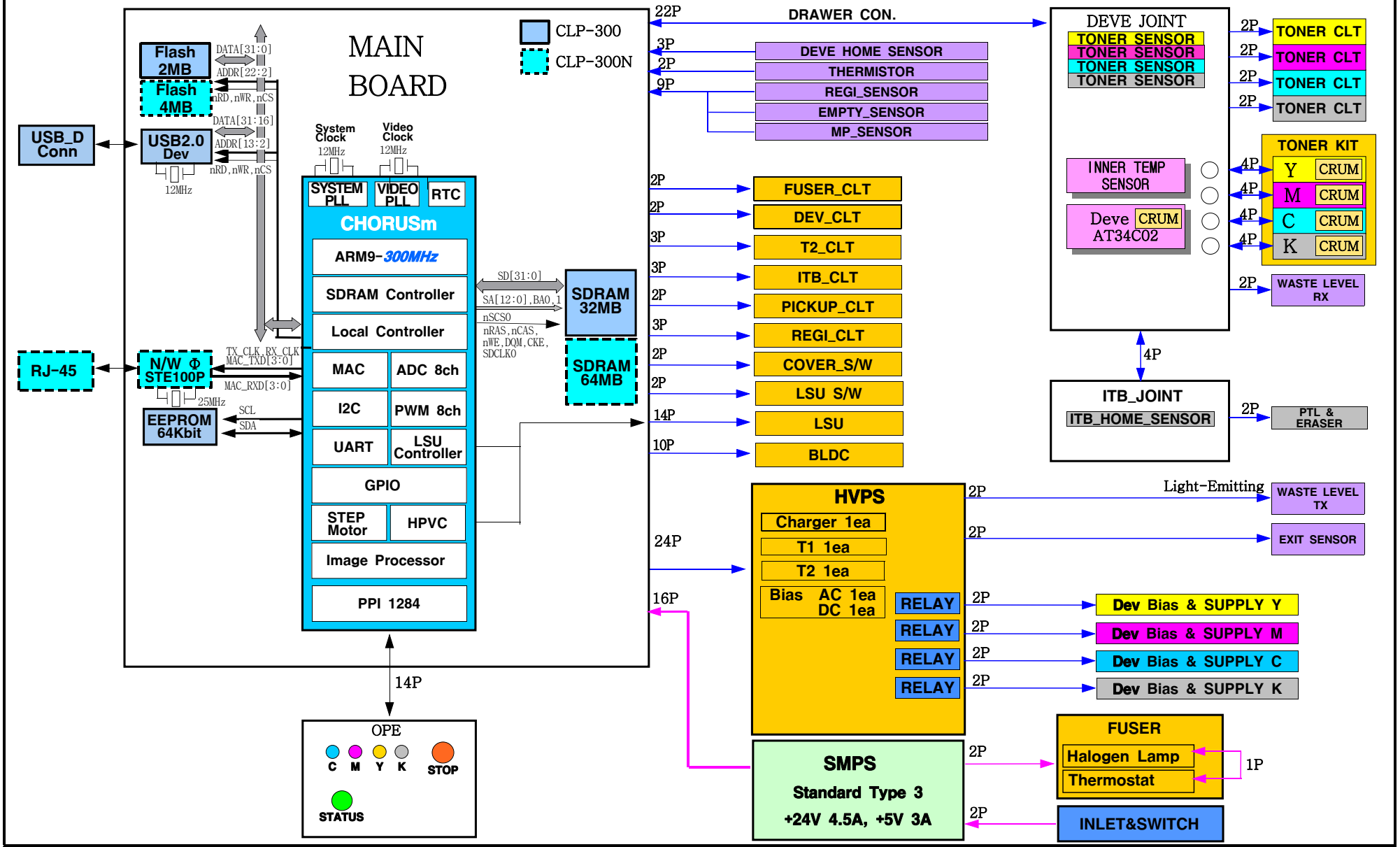[CLP-300(N)] Block Diagram