SAMSUNG ELECTRONICS
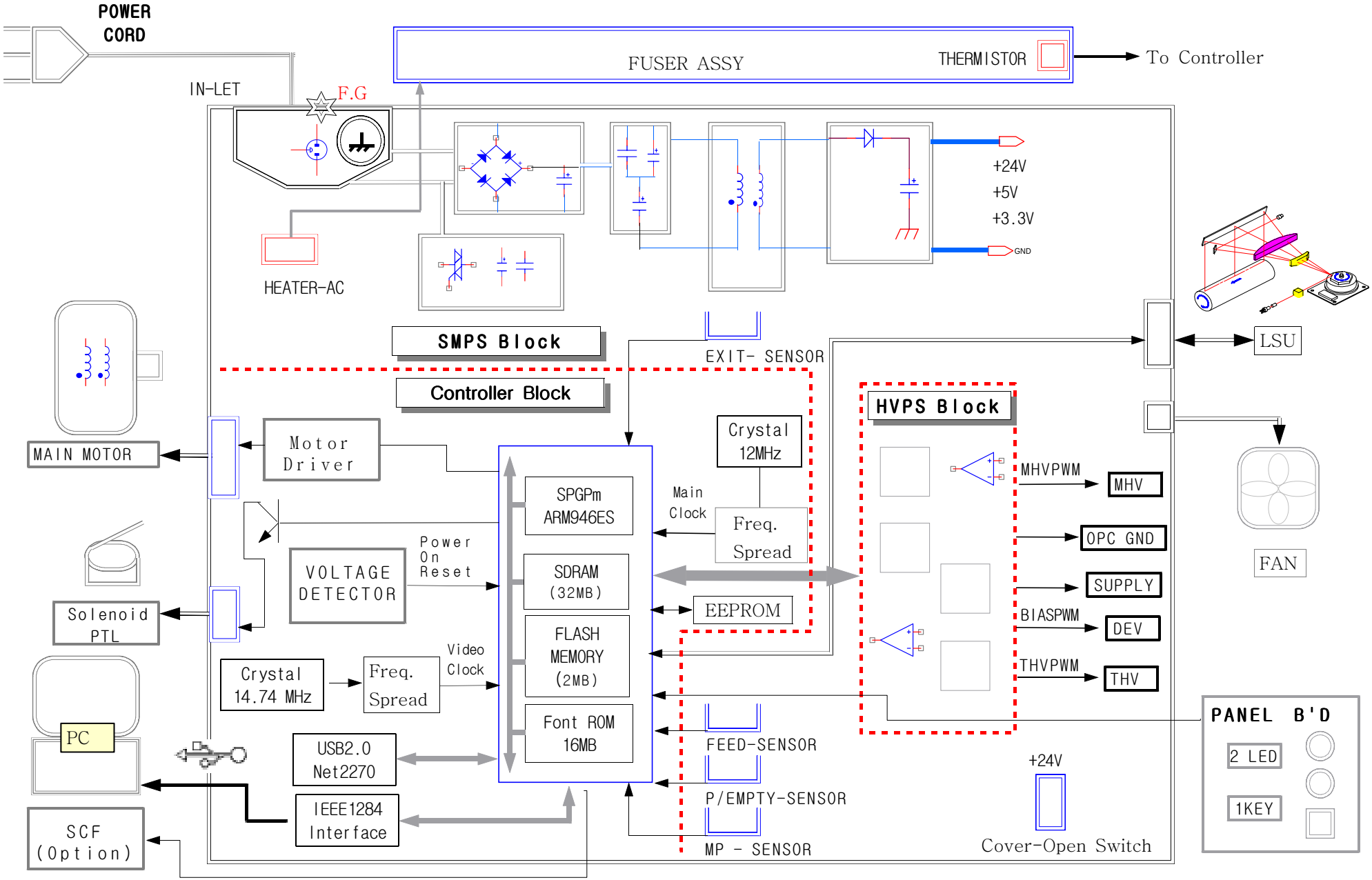
ML-1750 Block Diagram