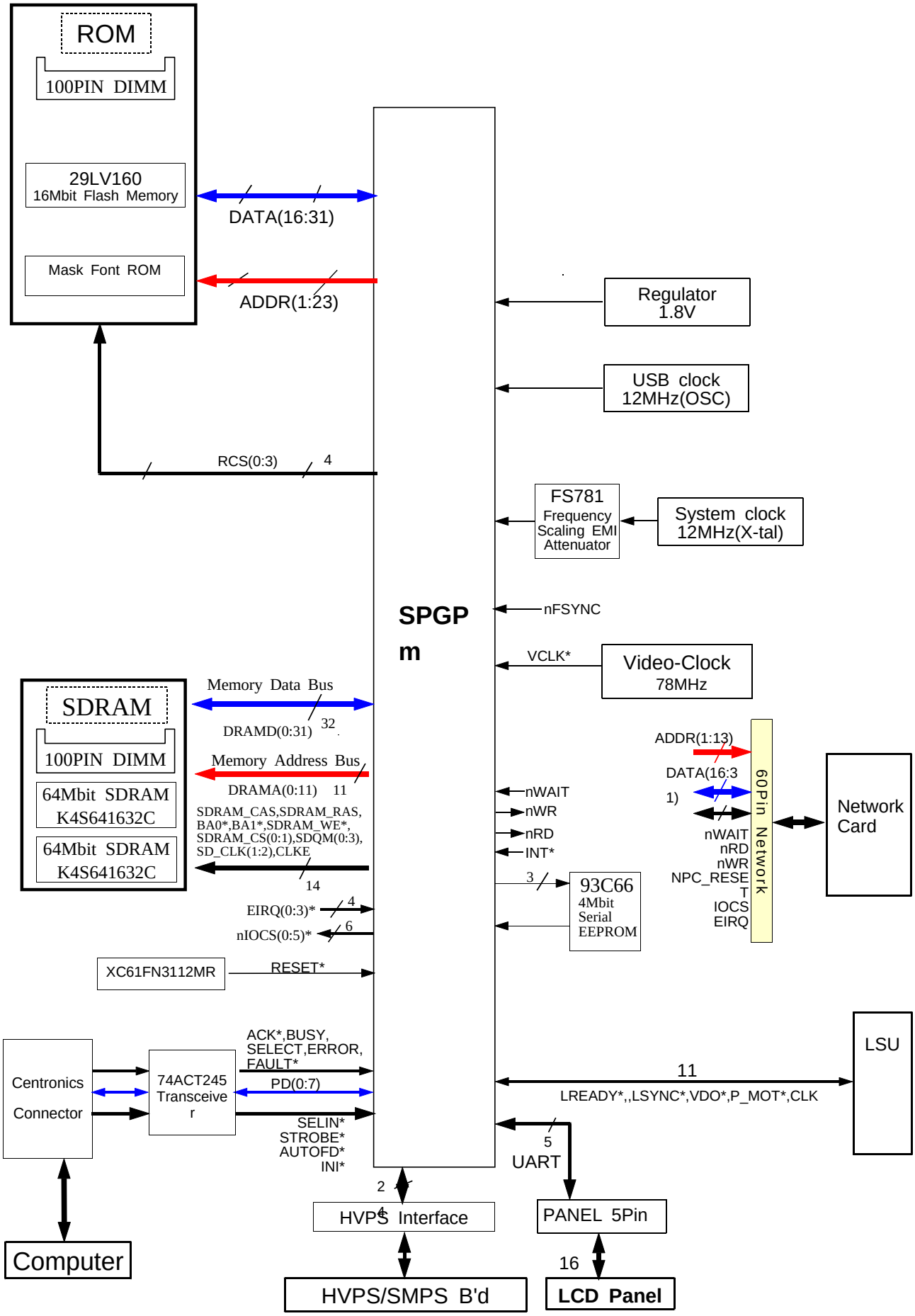ML-2060/2061N Block Diagram