Exhibit 5

0.8 Cu.ft Wiring Diagram for U. S
(Electronical CMO Model)

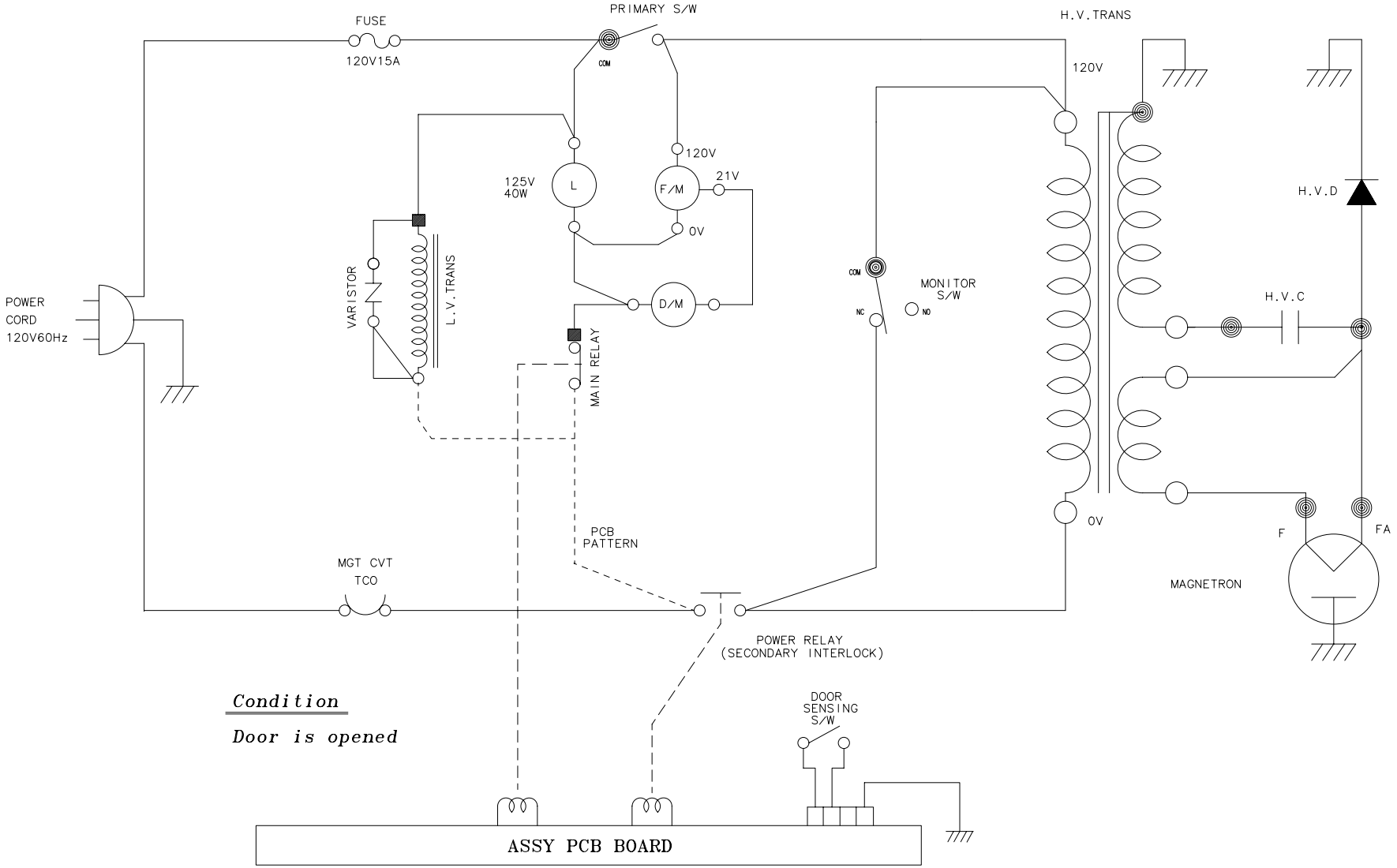

Condition

Door is opened

Exhibit 5

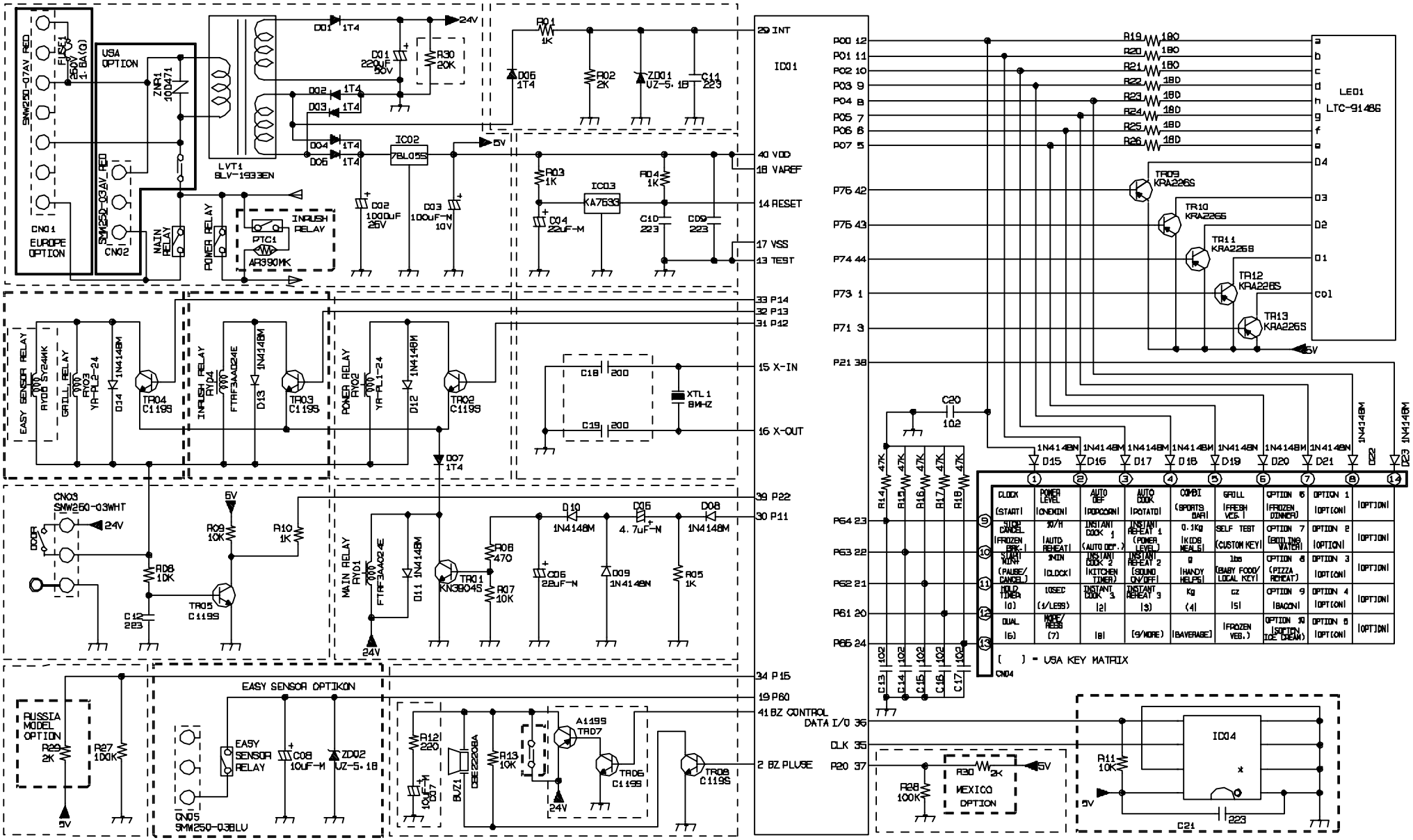

KIN HEE CHEDL
2000 12 D4

N2LED1
SCHEMATIC