* Robocop Analog Board Blockdiagram *

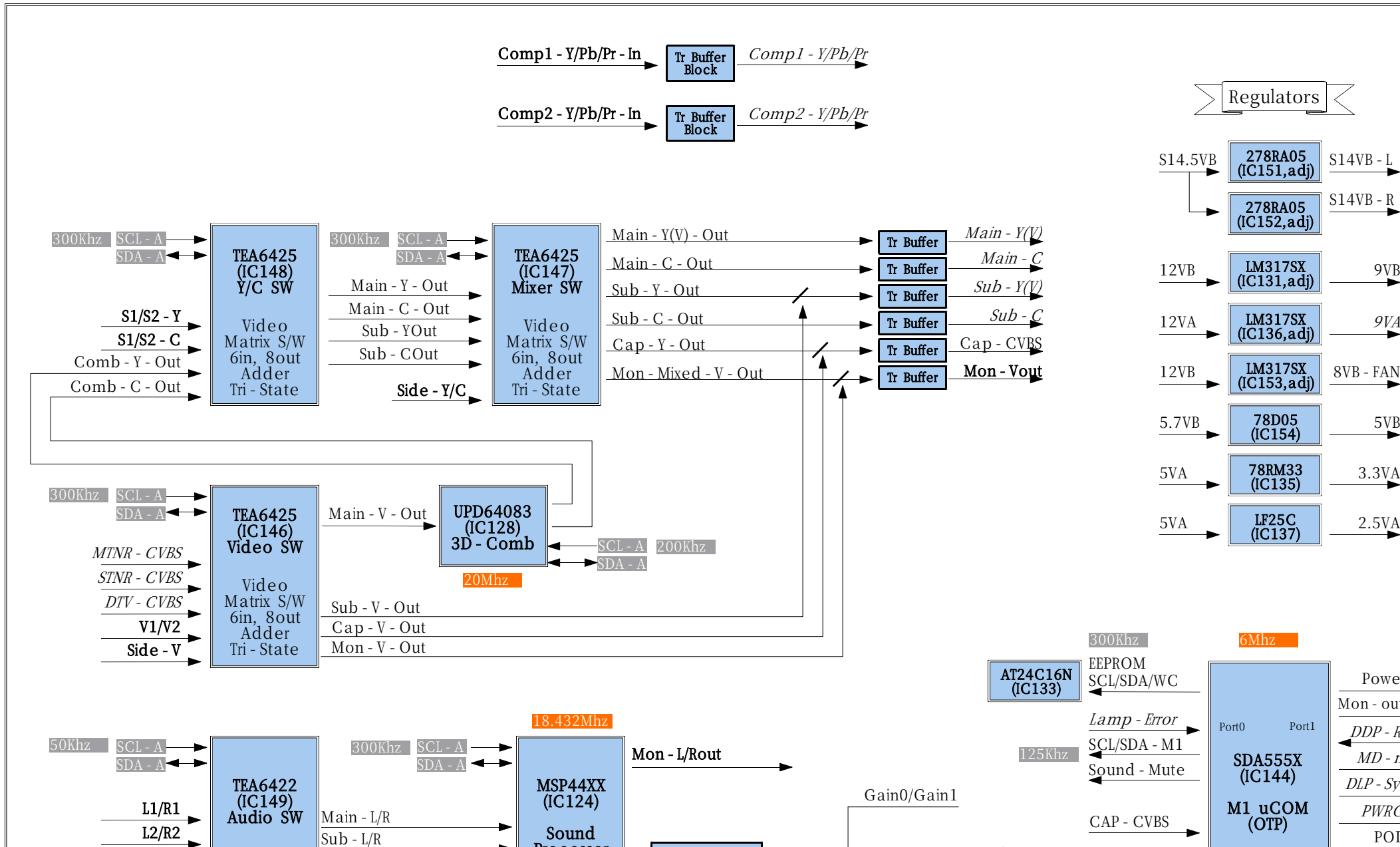
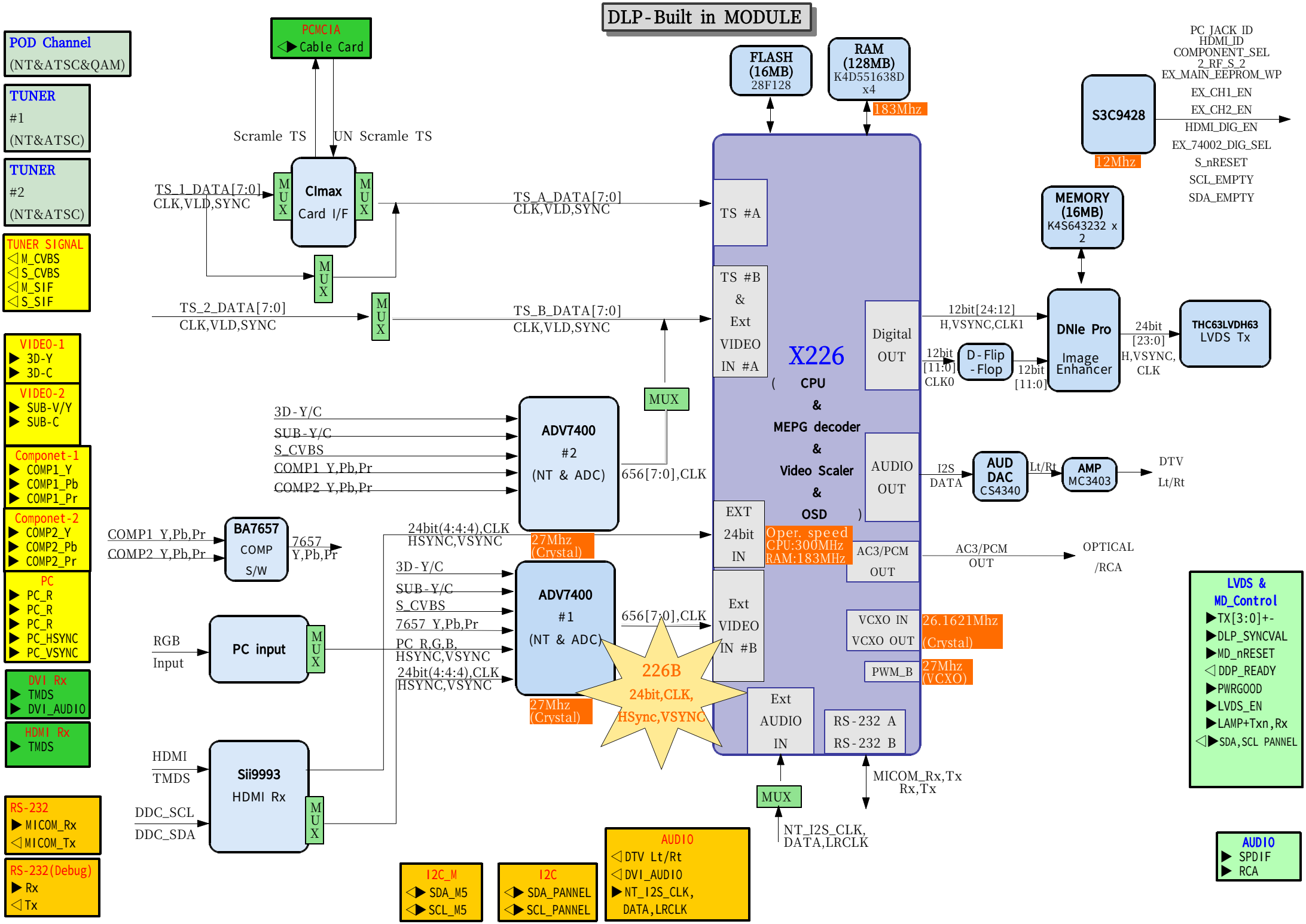
DLP-Built in MODULE