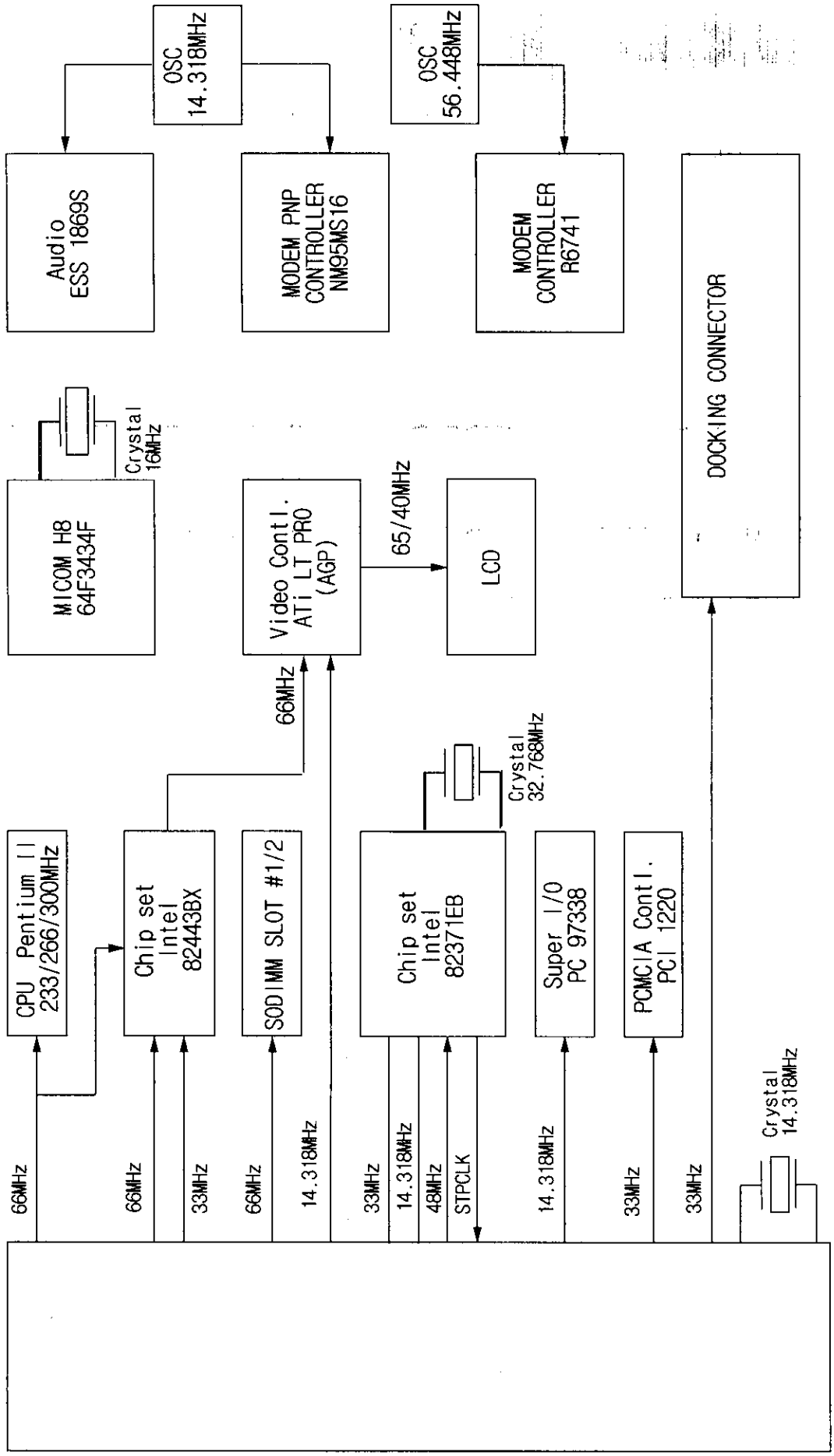SENS 720 Clock Diagram