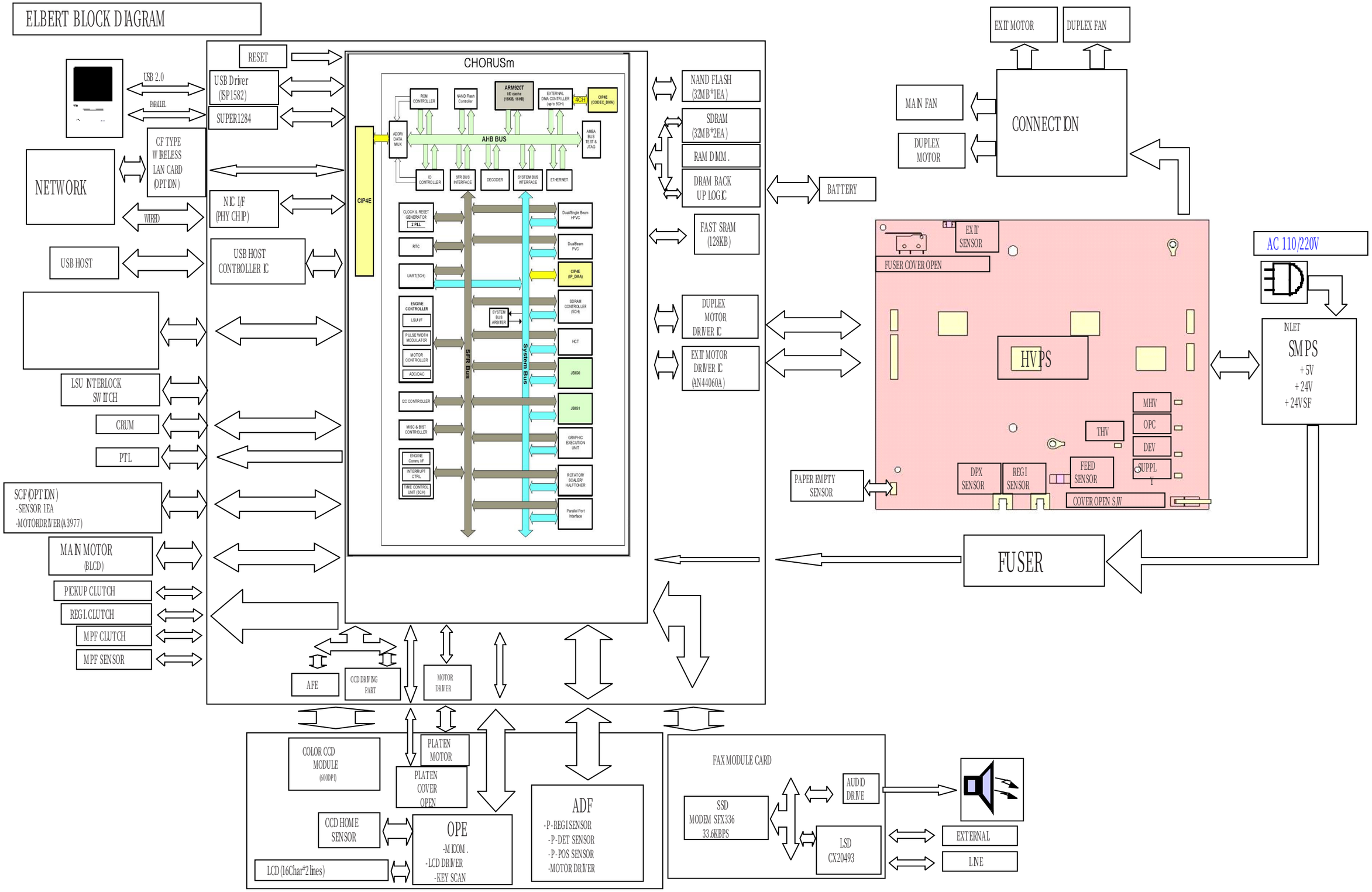ELBERT BLOCK DIAGRAM