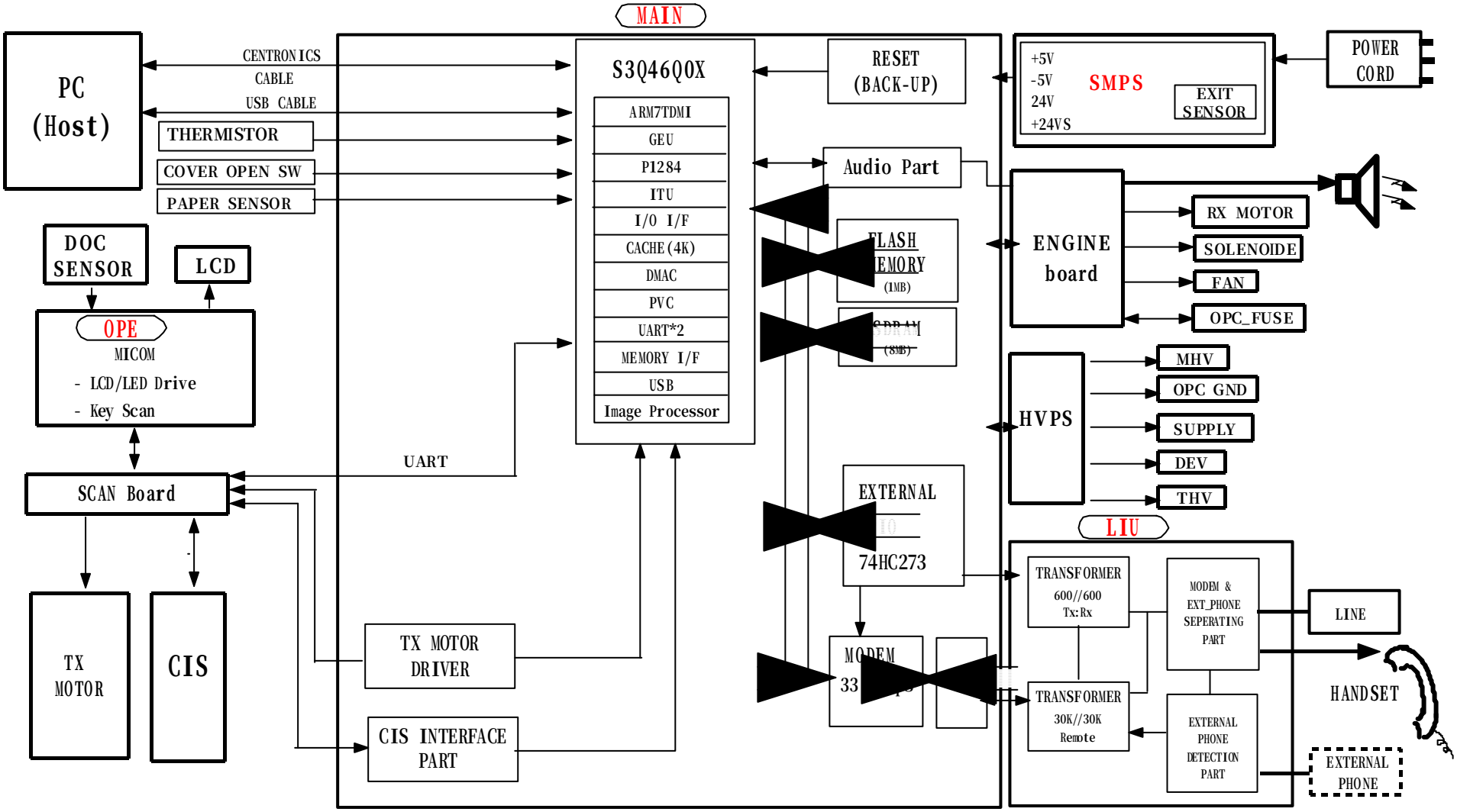[SF-555P Block Diagram]