This drawing is property of SEC. Use or copy of this drawing without proper permission from the appropriate technical-document managing department is prohibited.

Rev. No

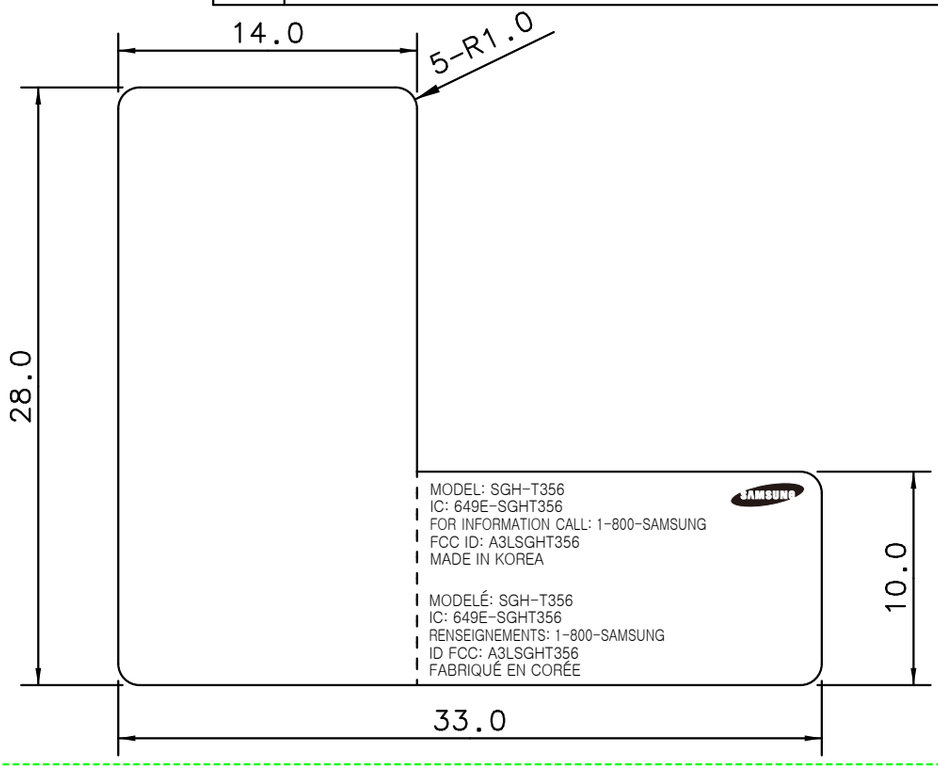

Technical Description
1. Use FILM provided by SAMSUNG for letter and contents
2. Background color is WHITE , letter color is BLACK (reverse for SAMSUNG LOGO)
3. Put Back paper on the back side after the adhesive.
4. No blur and spread for letter
5. Proceed with manufacturing process after the approval of R&D Group
6. The spec. of product must be based on approved limit samples.
7. Stock on as a ROLL
8. Unify material and color as one color (blue) for glassine paper

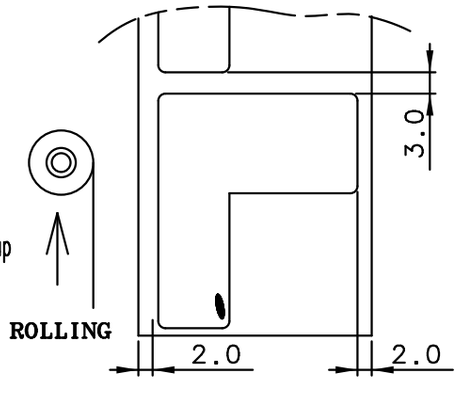

MAT.	White Polyrpropylene 80㎛			FIN. Translucent OPP Laminating +UVP Coating		
TITLE	SGH-T356 (CANADA-TELUS) LABEL(R)-MAIN					
UNIT	mm	DESIGNED	CHECKED	APPROVED	PROJECTION	
TOLERANCE	+0.0 -0.1	LEE JAE JIN	JO KEONG HWAN	KIM JUNE SOP		
SCALE	N/S				SHEET NO	1/1
MANUFACTURE	한성P&i	10-02-22	10-02-22	10-02-22		
SAMSUNG ELECTRONICS		Doc. CODE	GH68-			A

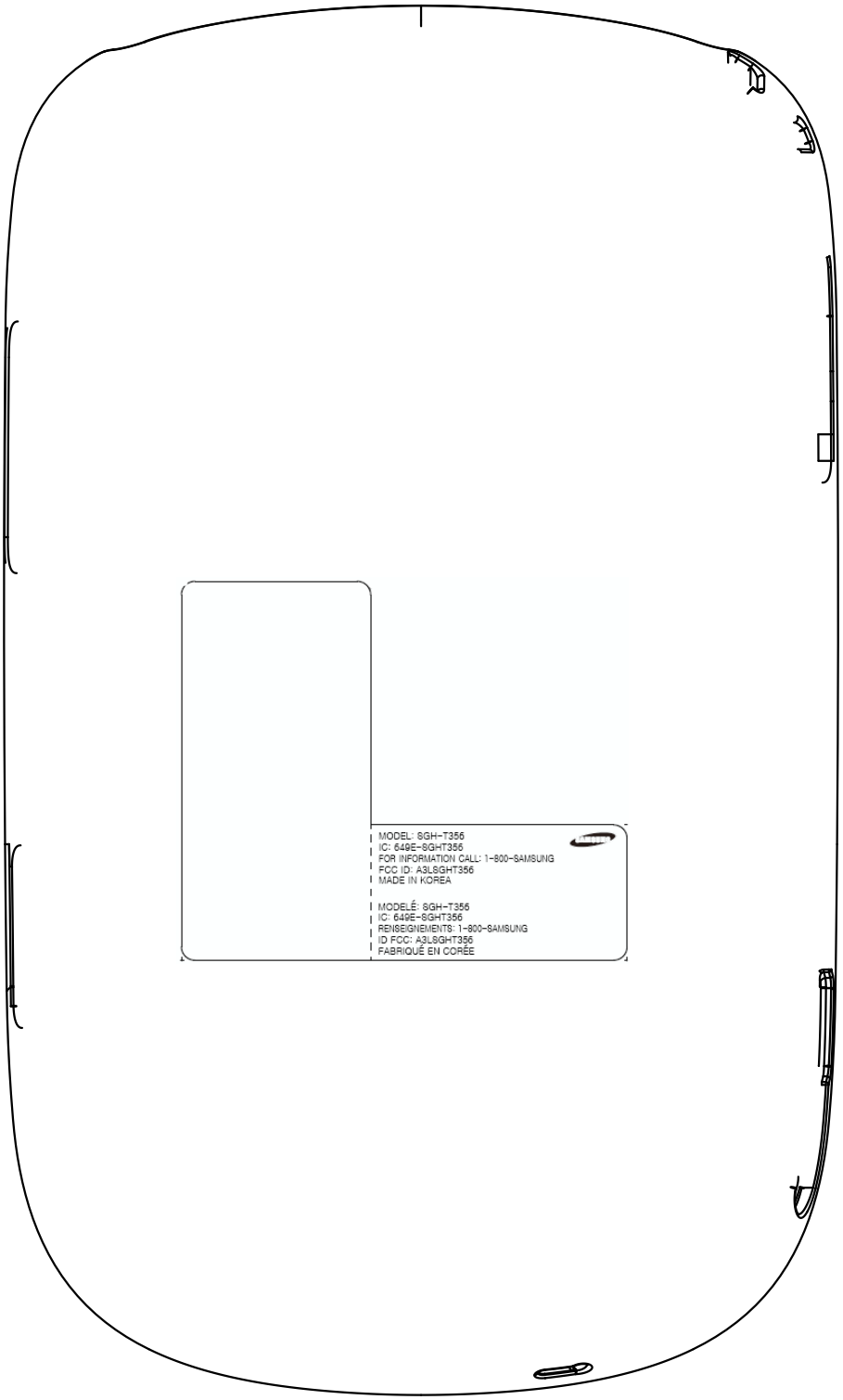

Note: The FCC ID label shown will be readily visible at the time of purchase.

The label is placed inside the battery compartment