This drawing is property of SEC. Use or copy of this drawing without proper permission from the appropriate technical-document managing department is prohibited.

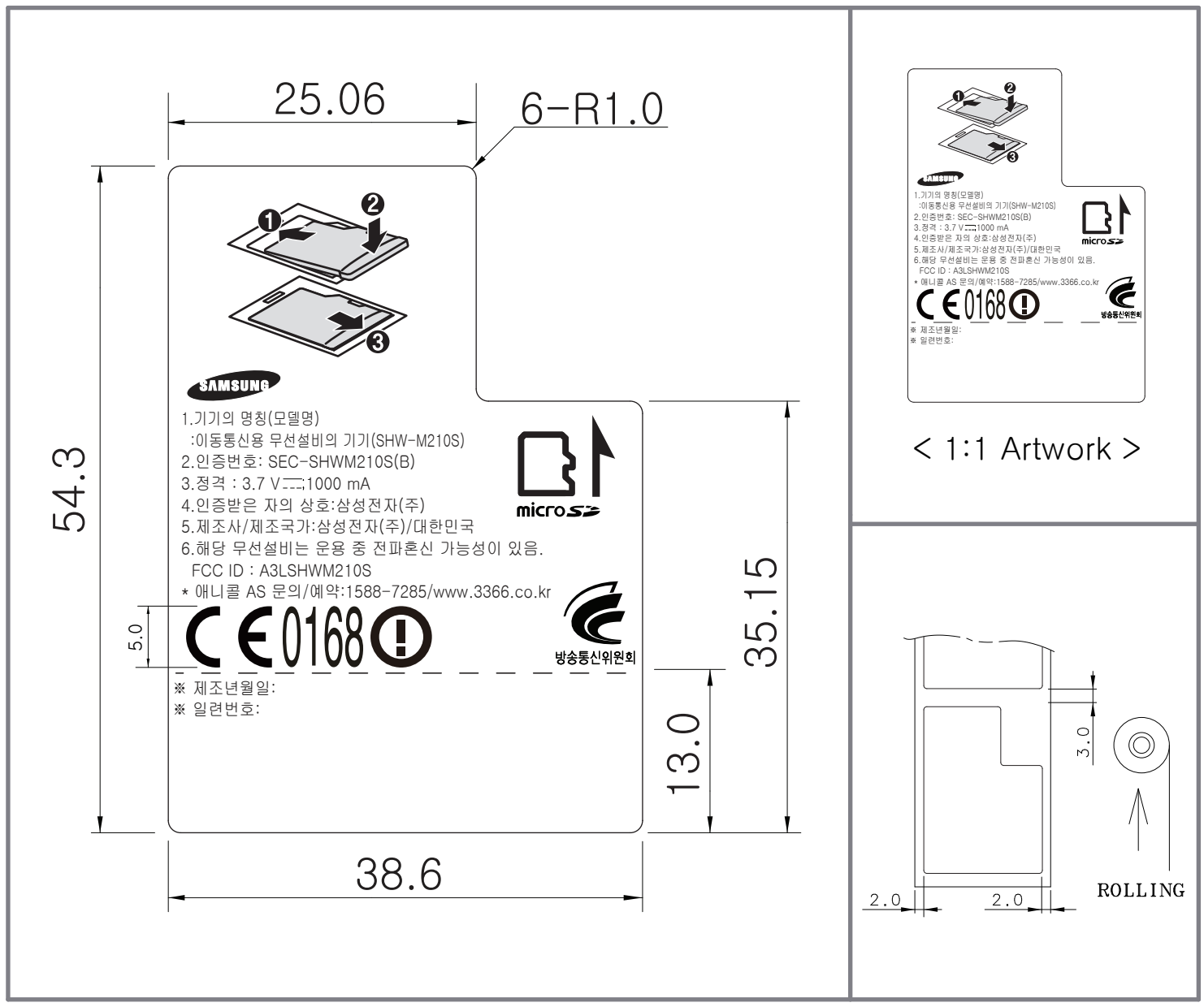

Technical Description

1. Use 'AI / PDF' provided by 'SAMSUNG' for letter and contents
2. Background color is 'WHITE', letter color is 'BLACK'
   (reverse for SAMSUNG LOGO)
3. Back side should be attached to release paper once adhesive is applied.
4. No letter should be blur/smeared
5. The production must be proceed after the approval of SAMSUNG R&D Group
6. The product must be within approved sample's specification tolerance.
7. The product must be finished in a ROLL
8. Release paper must be unifiedn for material and color(blue)
9. Do not contain any substances which are specified in (OQA-2049).

MAT.	OPP Laminating 16μ Adhesive 8μ WHITE POLYESTER 50μ Adhesive 25μ (0.1T±0.01)			FIN.	Semi transparency OPP laminating + UVP Coating	
TITLE	SHW-M210S(SKT) LABEL-MAIN					
UNIT	mm	DESIGNED	CHECKED	APPROVED	PROJECTION	
TOLERANCE	+0.0 −0.1	Park Tae San	Jo Kyeong Hwan	Kim June Sop		
SCALE	N/S				SHEET NO	1/1
Vendor	HANSUNG	100913	100913	100913		
SAMSUNG ELECTRONICS		Doc. CODE				

The label is placed inside the battery compartment

Note: The FCC ID label shown will be readily visible at the time of purchase.