Xpress M282**** / Xpress M262**** [Printer] Series Block Diagram

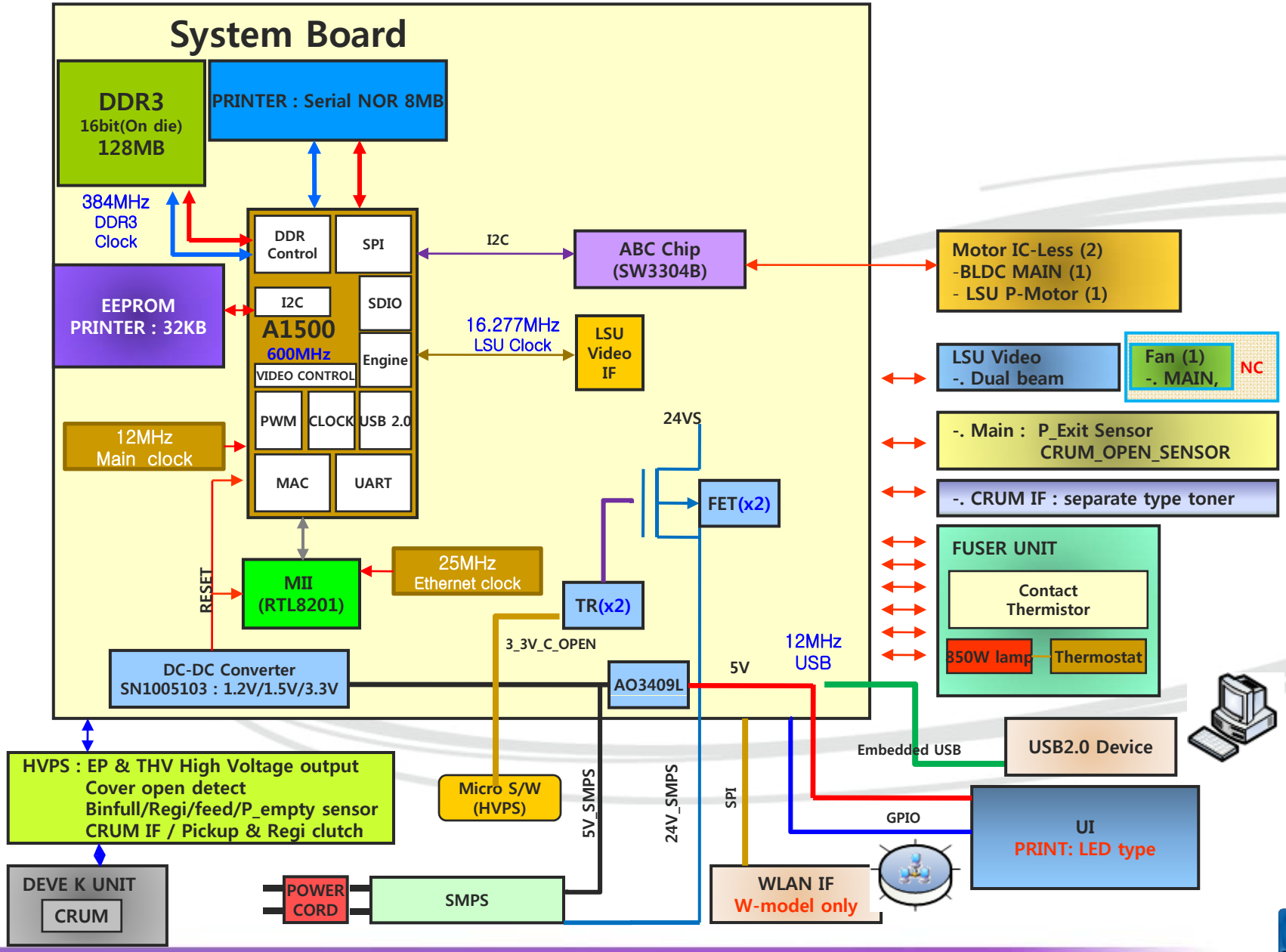

Ctrl P