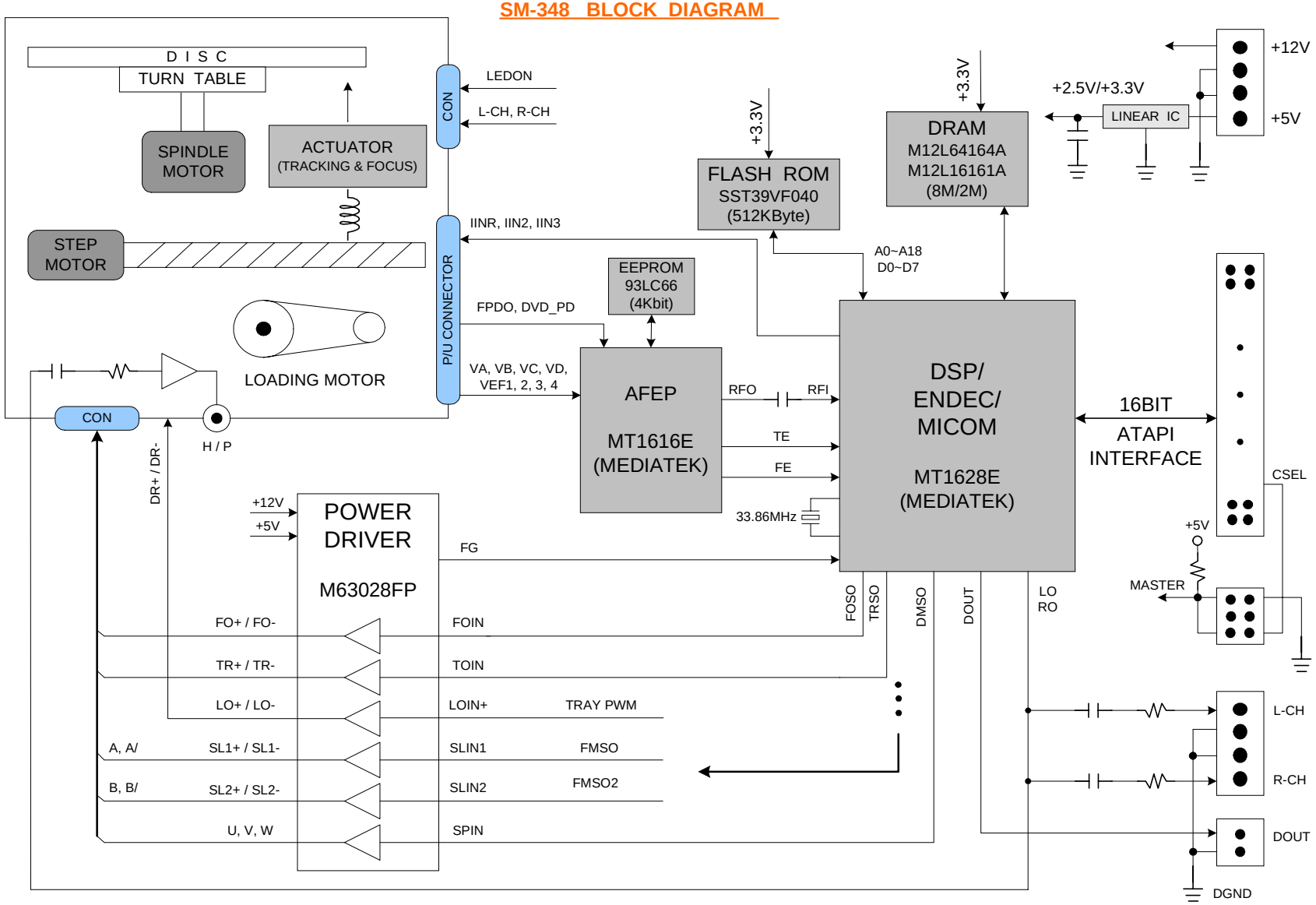SM-348 BLOCK DIAGRAM