CORONA: BANIAS/ODEM/ATI-M9 BLOCK_DIAGRAM

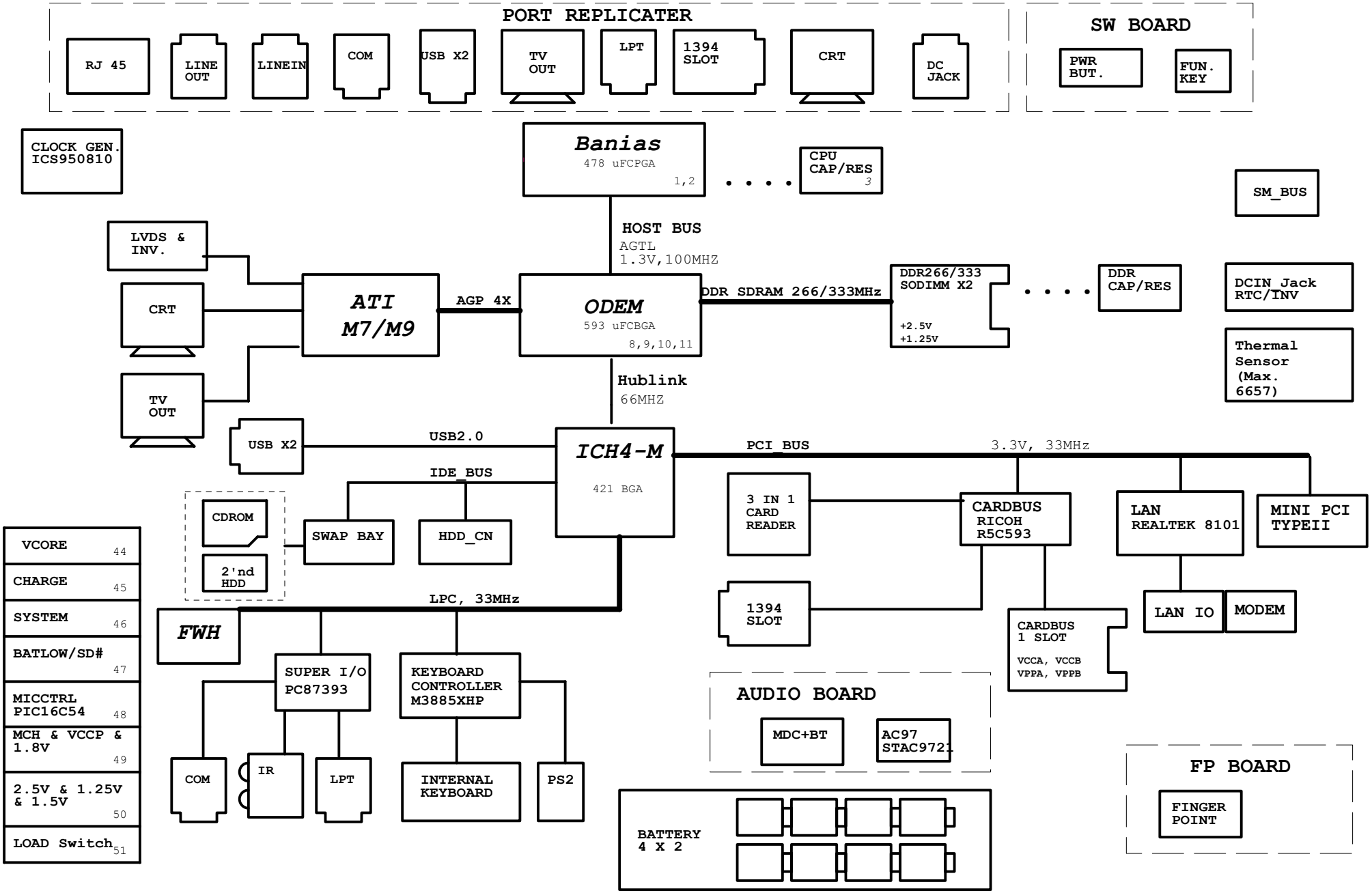

PROJECT: Corona	REVISION 0.3	DATE: Tuesday, June 03, 2003 SHEET 1 OF 54	DESCRIPTION: BLOCK DIAGRAM	SCHEMATIC FILE NAME : CO020SEC.DSN RELEASE DATE :	DESIGN ENGINEER : Julian Kuo