SAMSUNG PROPRIETARY
THIS DOCUMENT CONTAINS CONFIDENTIAL PROPRIETARY INFORMATION THAT IS SAMSUNG ELECTRONICS CO'S PROPERTY. DO NOT DISCLOSE TO OR DUPLICATE FOR OTHERS EXCEPT AS AUTHORIZED BY SAMSUNG.

CARINA

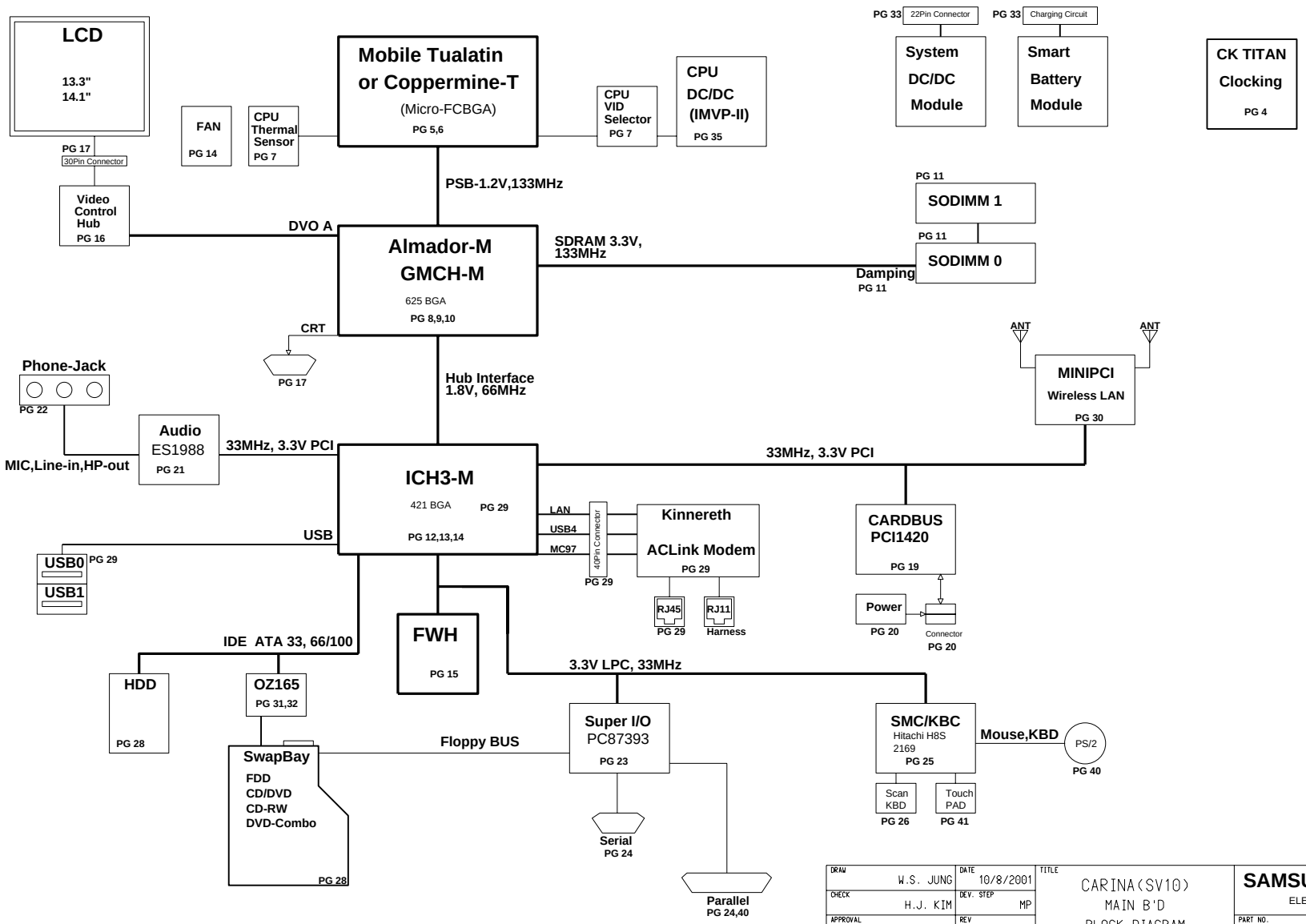

DRAW W.S. JUNG	DATE 10/8/2001	TITLE CARINA(SV10) MAIN B'D BLOCK DIAGRAM	SAMSUNG ELECTRONICS
CHECK H.J. KIM	DEV. STEP MP		
APPROVAL KEVIN, LEE	REV 1.0		PART NO. BA41-XXXXXX
MODULE CODE	LAST EDIT October 8, 2001 12:03:39 PM		PAGE 2 OF 39