APPENDIX C. Block Diagram / Schematics

Model No.: MM-627AMY
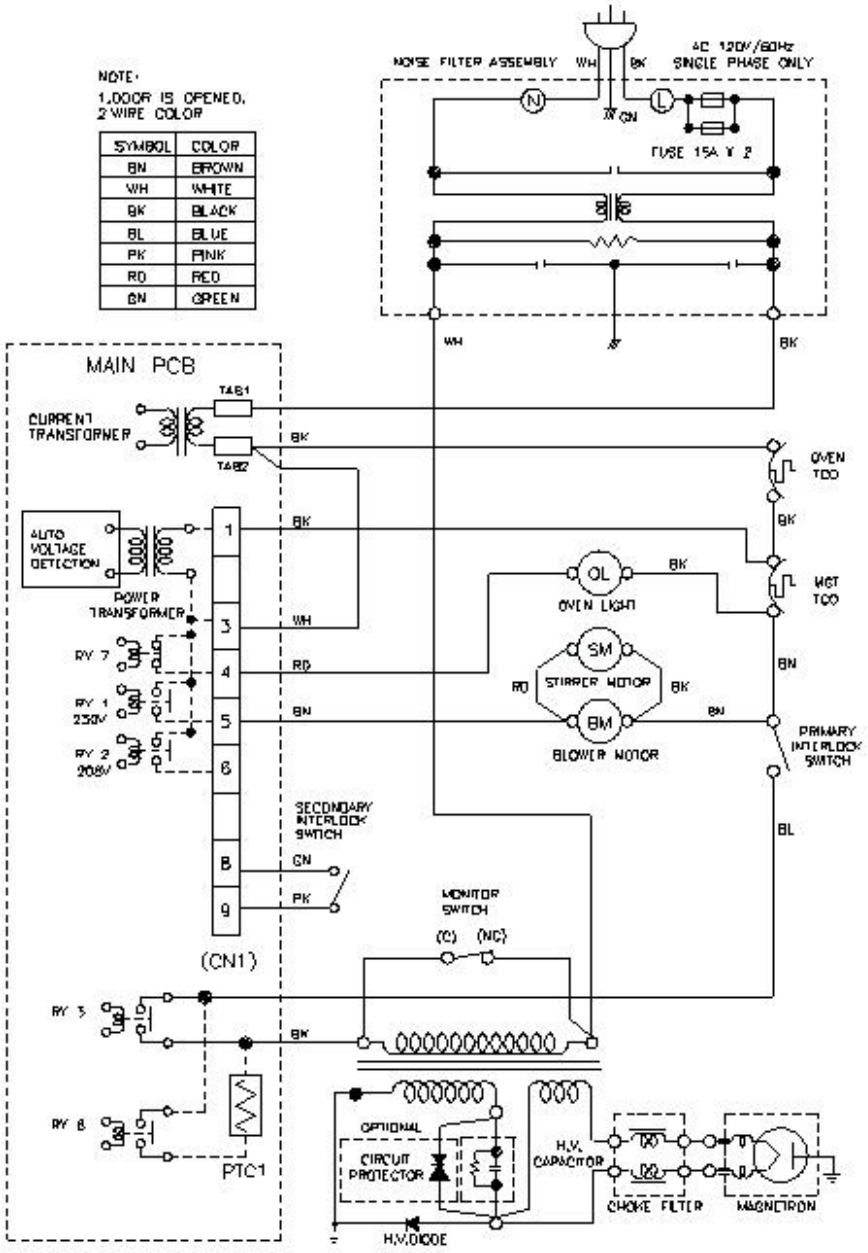
FCC ID: BEJC520ZK