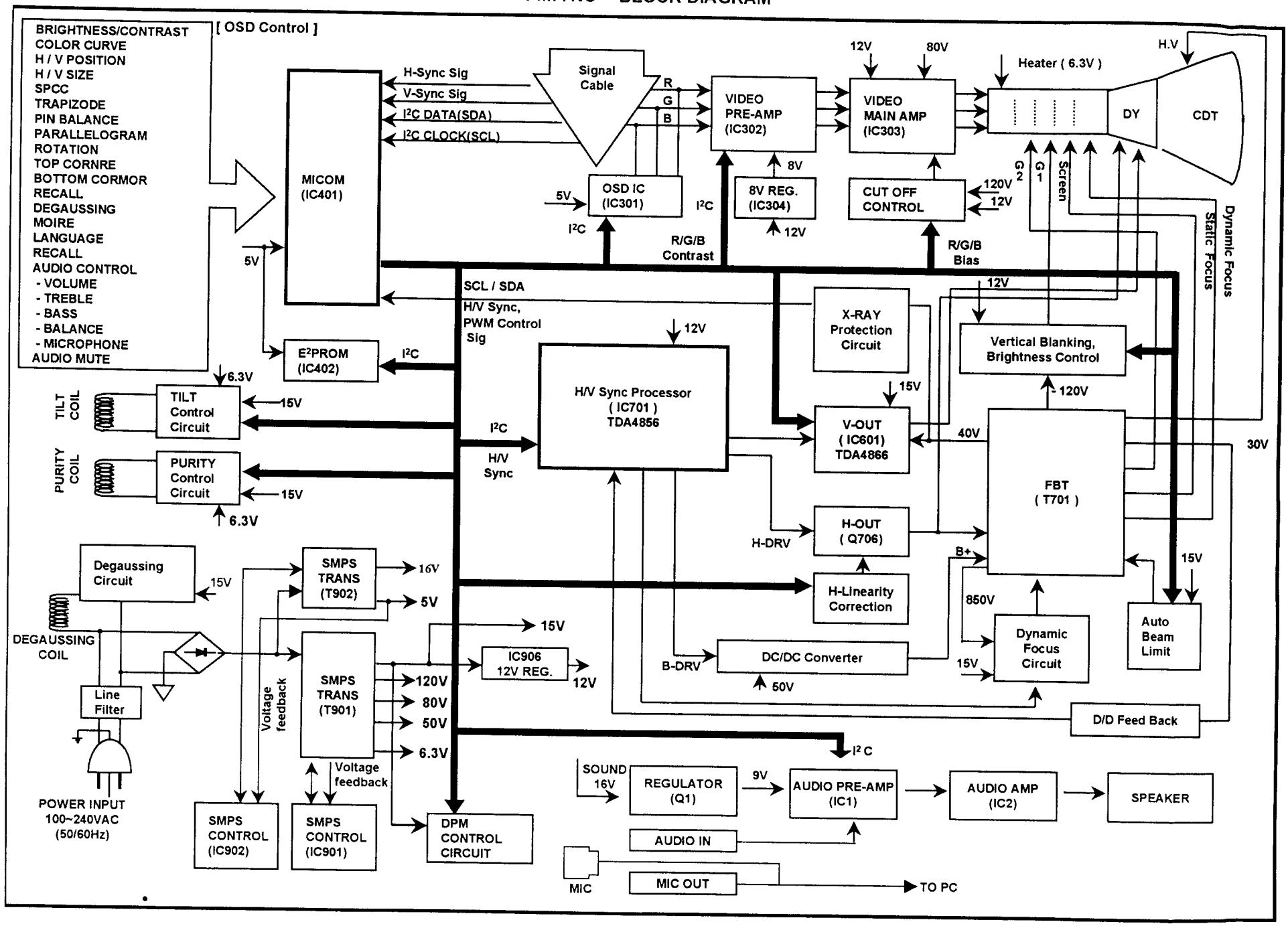FM77NC * BLOCK DIAGRAM