ATTACHMENT F – BLOCK DIAGRAM(S)

© 2001 PCTEST Lab
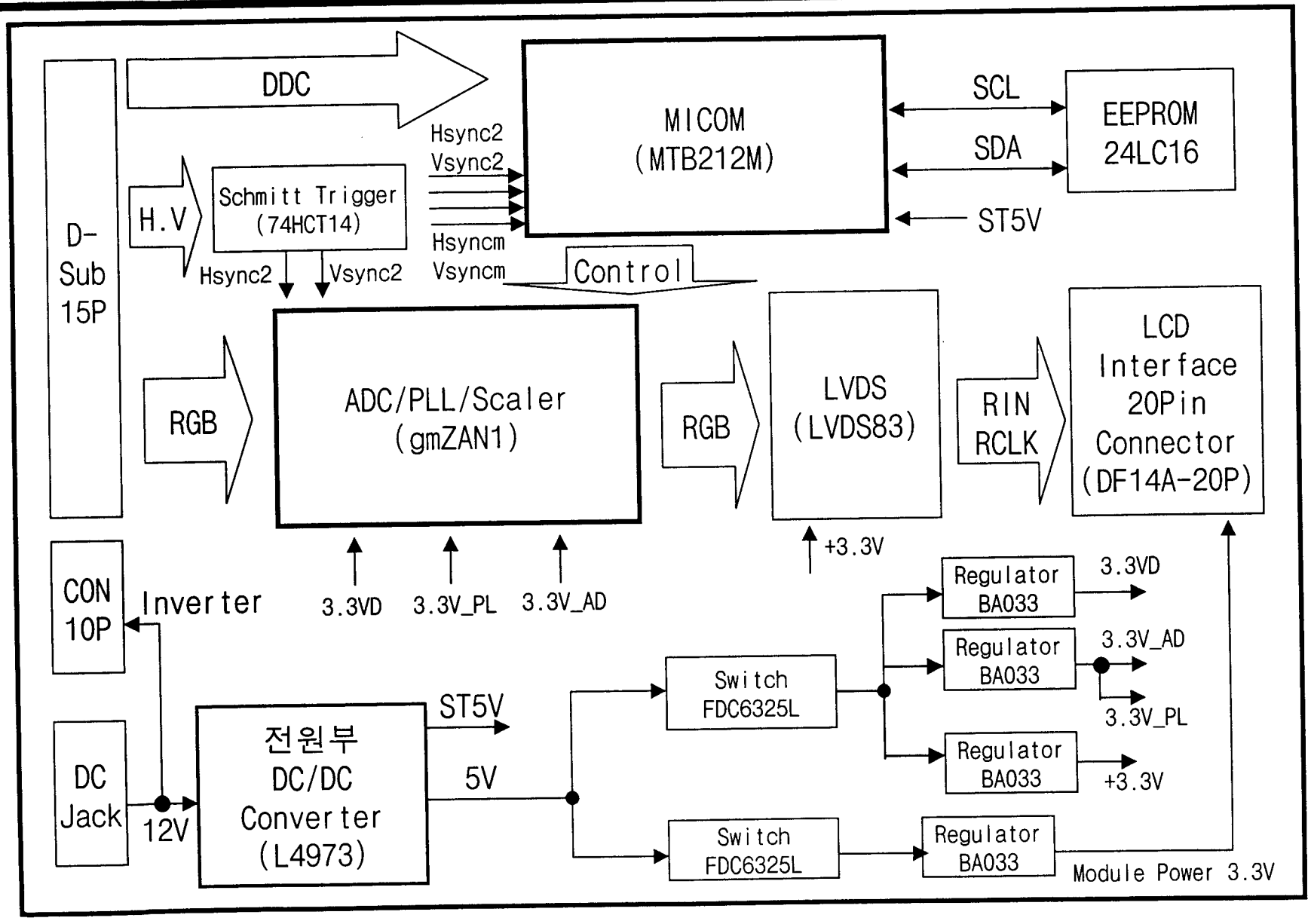
Block Diagram