42" Piggy Back PDP VSC Block Diagram

Lee.j.w 2002.11.05

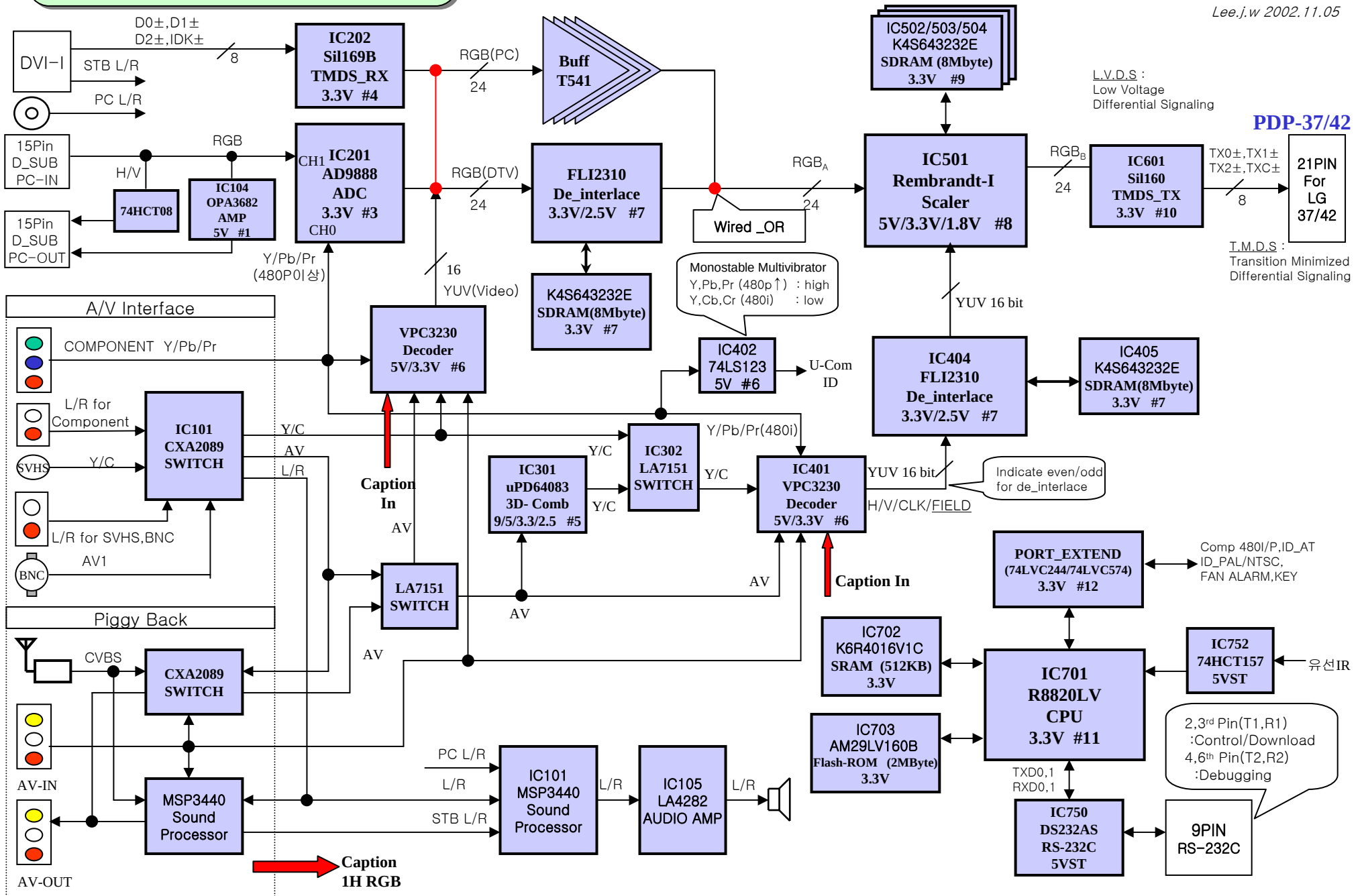

#:the number of the circuit schematic
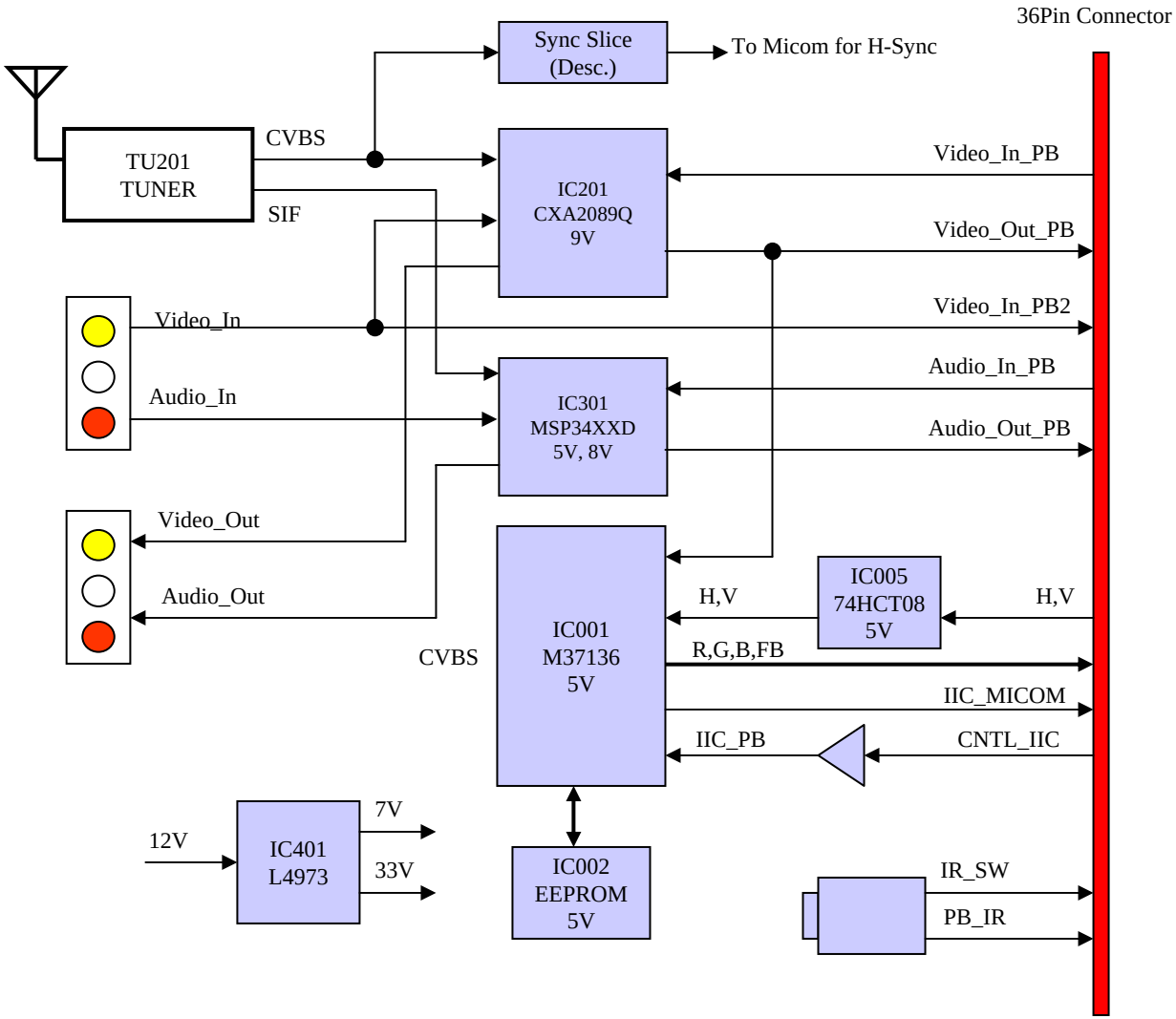
42” Piggy Back Block Diagram