Schematic Diagram

Model: MZ-1246MG

FCC ID : BEJX1241XG

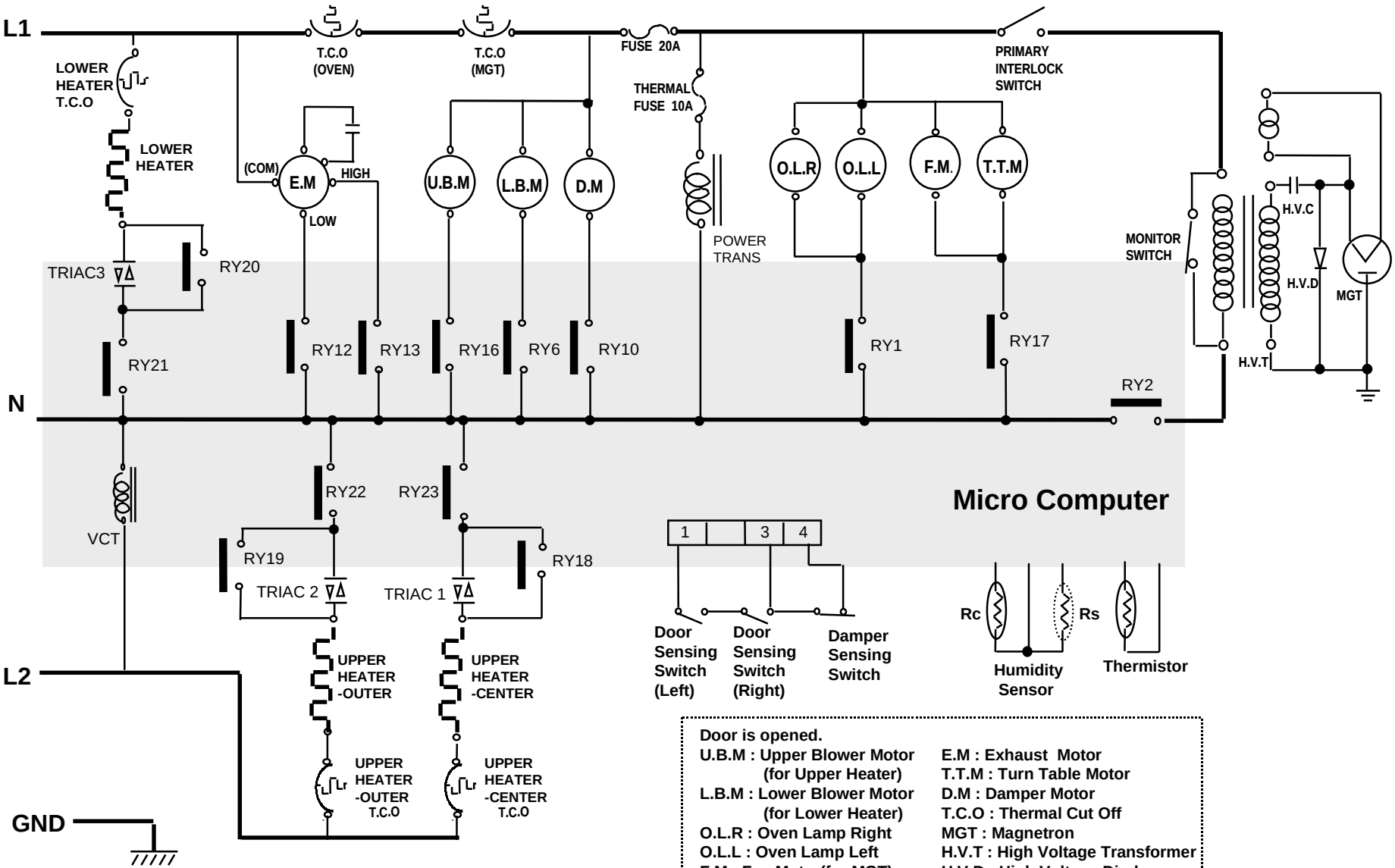

Door is opened.

U.B.M : Upper Blower Motor (for Upper Heater)
L.B.M : Lower Blower Motor (for Lower Heater)
O.L.R : Oven Lamp Right
O.L.L : Oven Lamp Left
F.M : Fan Motor(for MGT)
V.C.T: Voltage Compensation Transformer

E.M : Exhaust Motor
T.T.M : Turn Table Motor
D.M : Damper Motor
T.C.O : Thermal Cut Off
MGT : Magnetron
H.V.T : High Voltage Transformer
H.V.D : High Voltage Diode
H.V.C : High Voltage Capacitor

Schematic Diagram

Model: MZ-1246MG

FCC ID : BEJX1241XG

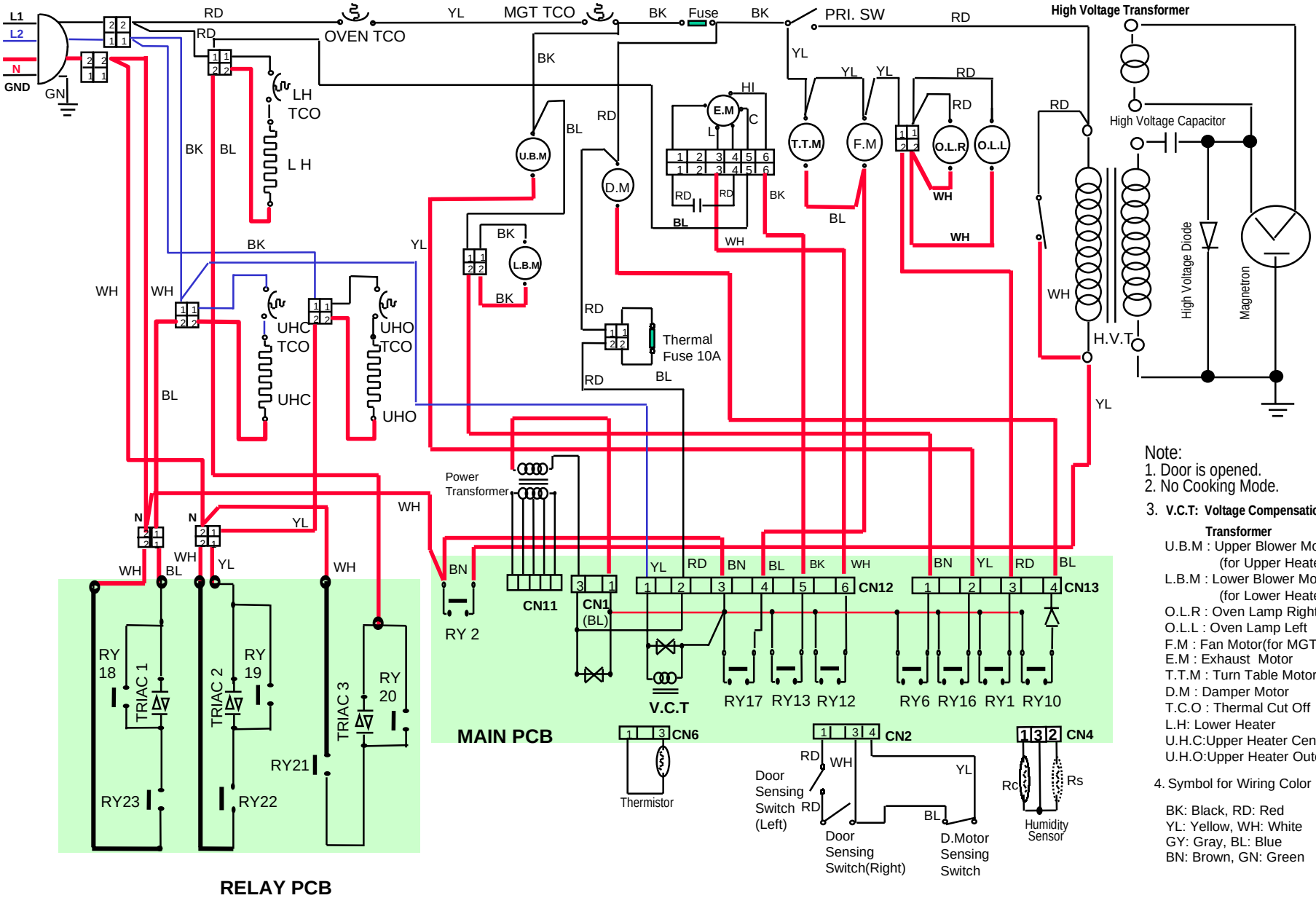

Note:
1. Door is opened.
2. No Cooking Mode.
3. **V.C.T: Voltage Compensation Transformer**

U.B.M : Upper Blower Motor (for Upper Heater)
L.B.M : Lower Blower Motor (for Lower Heater)
O.L.R : Oven Lamp Right
O.L.L : Oven Lamp Left
F.M : Fan Motor(for MGT)
E.M : Exhaust Motor
T.T.M : Turn Table Motor
D.M : Damper Motor
T.C.O : Thermal Cut Off
L.H: Lower Heater
U.H.C:Upper Heater Center
U.H.O:Upper Heater Outer

4. Symbol for Wiring Color

BK: Black, RD: Red
YL: Yellow, WH: White
GY: Gray, BL: Blue
BN: Brown, GN: Green