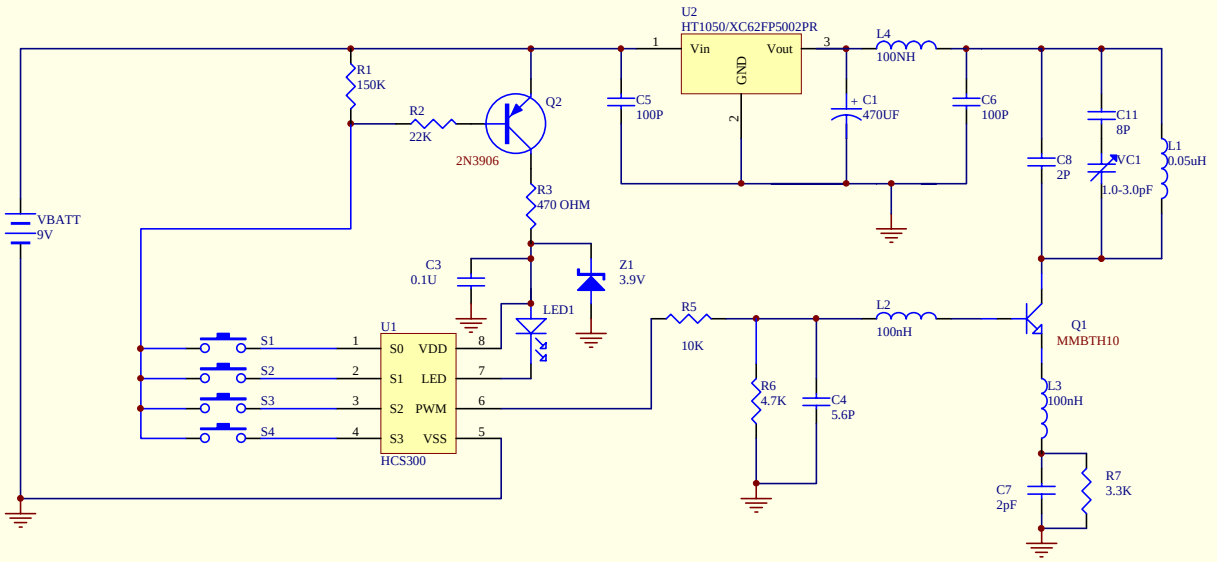

Title	841 RF TRANSMITTER	computime ltd
Size A4	Number	Revision
Date: 5-Nov-2002		Sheet of
File: C:\work\841-842\sch\841(418MHz).DDB		Drawn By: sunbo