EXHIBIT E

Block Diagram

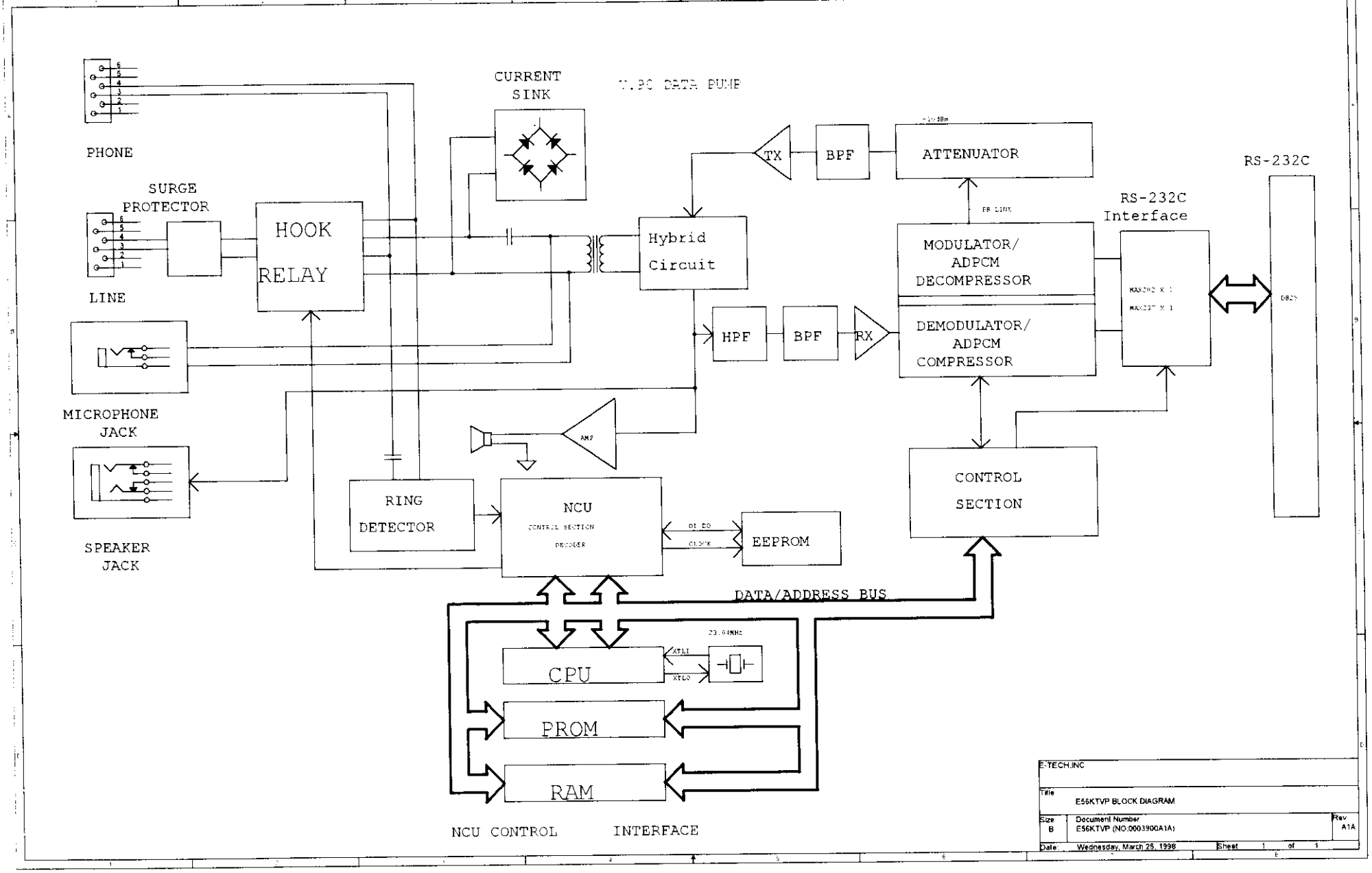
PHONE
SURGE PROTECTOR
LINE
HOOK RELAY
CURRENT SINK
V.90 DATA PUMP
Hybrid Circuit
TX
BPF
ATTENUATOR
RS-232C
RS-232C Interface
MODULATOR/ ADPCM DECOMPRESSOR
DEMODULATOR/ ADPCM COMPRESSOR
HPF
BPF
RX
MICROPHONE JACK
SPEAKER JACK
AMP
RING DETECTOR
NCU
EEPROM
CONTROL SECTION
DATA/ADDRESS BUS
CPU
PROM
RAM
NCU CONTROL INTERFACE
E-TECH,INC
Title
E56KTVP BLOCK DIAGRAM
Size B
Document Number
E56KTVP (NO:0003900A1A)
Rev A1A
Date: Wednesday, March 25, 1998
Sheet 1 of 1