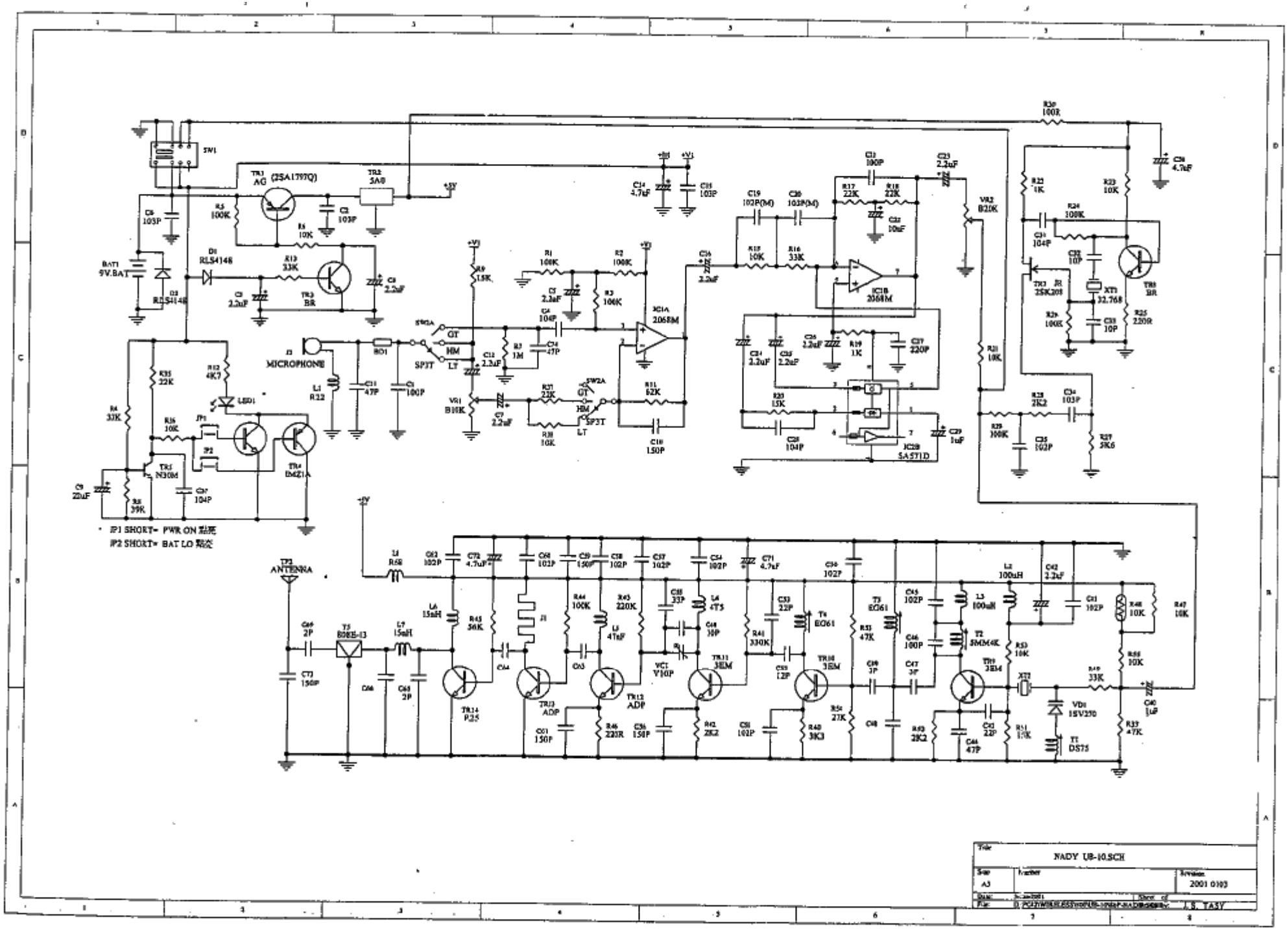
MICROPHONE
ANTENNA
IP1 SHORT= PWR ON
IP2 SHORT= BAT LO
NADY U8-10.SCH
A3
2001 0103
J.S. TASY