#: 253440 (49MC)

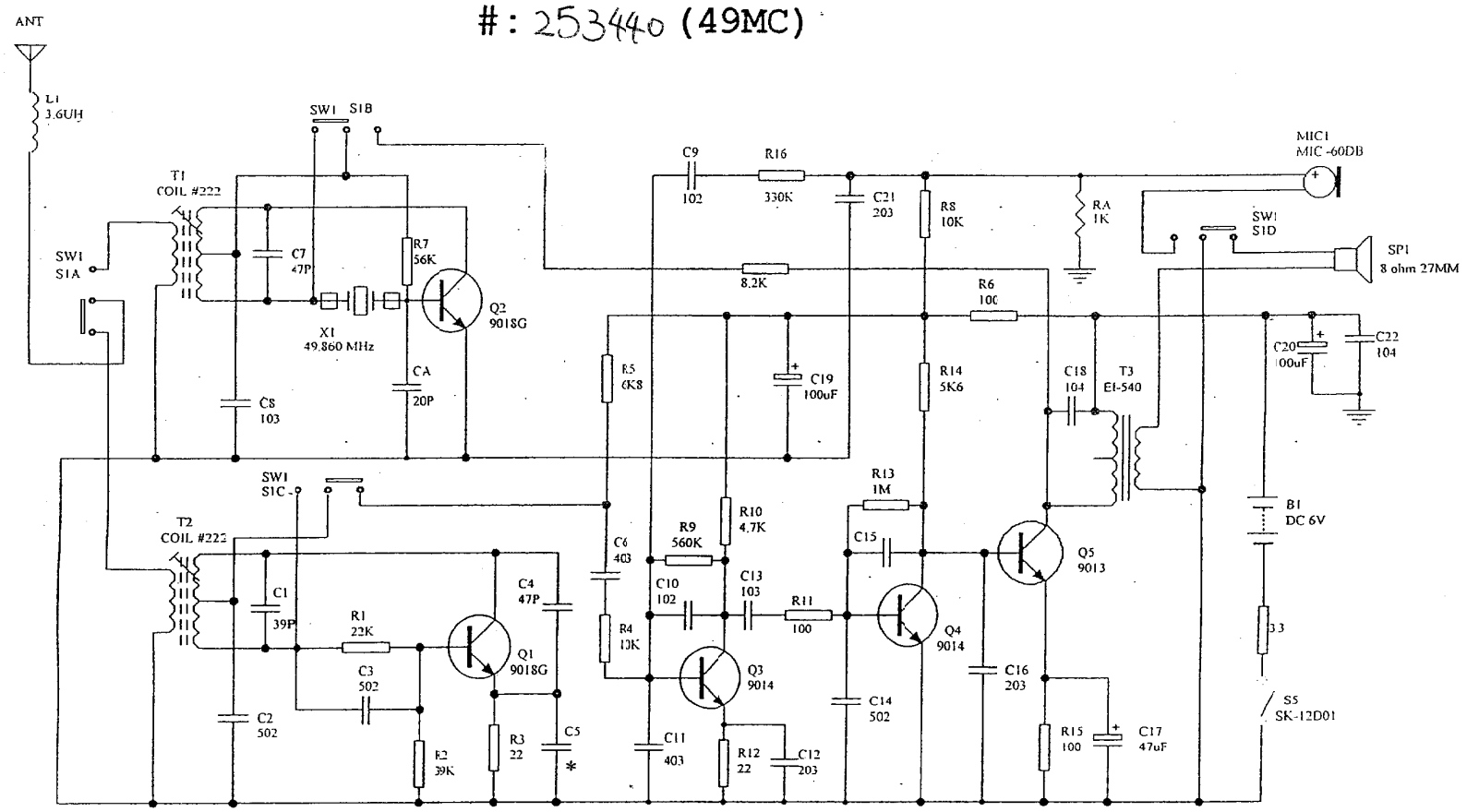
ANT
L1
3.6UH
SW1 S1B
T1
COIL #222
SW1
S1A
C7
47P
R7
56K
Q2
9018G
X1
49.860 MHz
CA
20P
C8
103
C9
102
R16
330K
C21
203
R8
10K
RA
1K
MIC1
MIC -60DB
SW1
S1D
SP1
8 ohm 27MM
8.2K
R6
100
R5
6K8
C19
100uF
R14
5K6
C18
104
T3
EI-540
C20
100uF
C22
104
SW1
S1C
T2
COIL #222
C1
39P
R1
22K
C4
47P
Q1
9018G
C3
502
C2
502
R2
39K
R3
22
C5
*
C6
403
R4
10K
R9
560K
R10
4.7K
C10
102
C13
103
R11
100
Q3
9014
C11
403
R12
22
C12
203
R13
1M
C15
Q4
9014
C14
502
Q5
9013
C16
203
R15
100
C17
47uF
B1
DC 6V
3.3
S5
SK-12D01