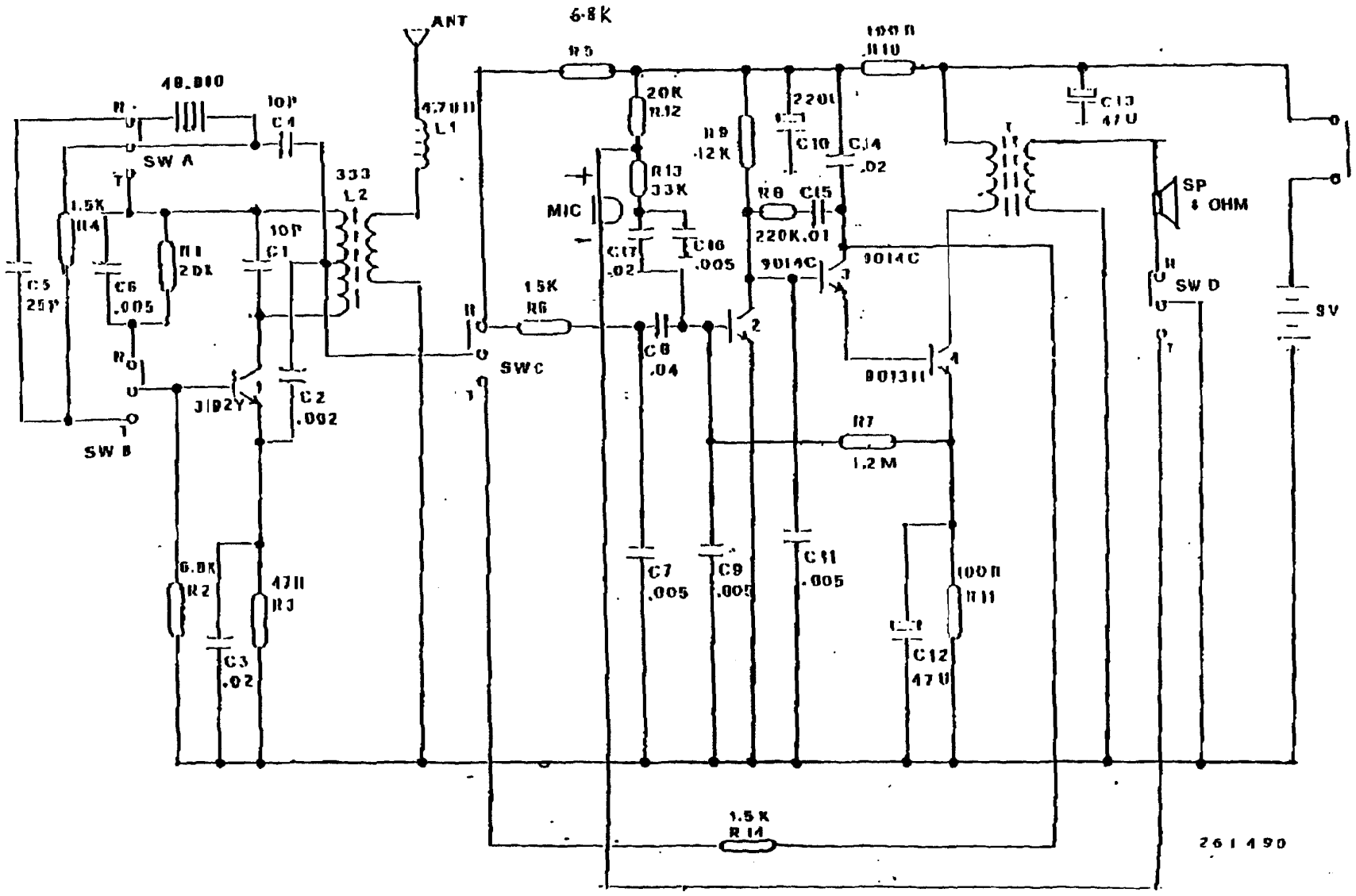
ANT
6.8K
R5
100 Ω
R10
C13
47U
40.000
10P
C4
SW A
333
L2
47UH
L1
20K
R12
R13
33K
R9
12K
220U
C10
C14
.02
MIC
C17
.02
C16
.005
R8
C15
220K.01
9014C
9014C
SP
8 OHM
SW D
9V
1.5K
R4
C6
.005
R1
20K
10P
C1
C5
25P
15K
R6
SWC
C8
.04
9013H
R7
1.2M
3192Y
C2
.002
SW B
6.8K
R2
47H
R3
C3
.02
C7
.005
C9
.005
C11
.005
100Ω
R11
C12
47U
1.5K
R14
261490