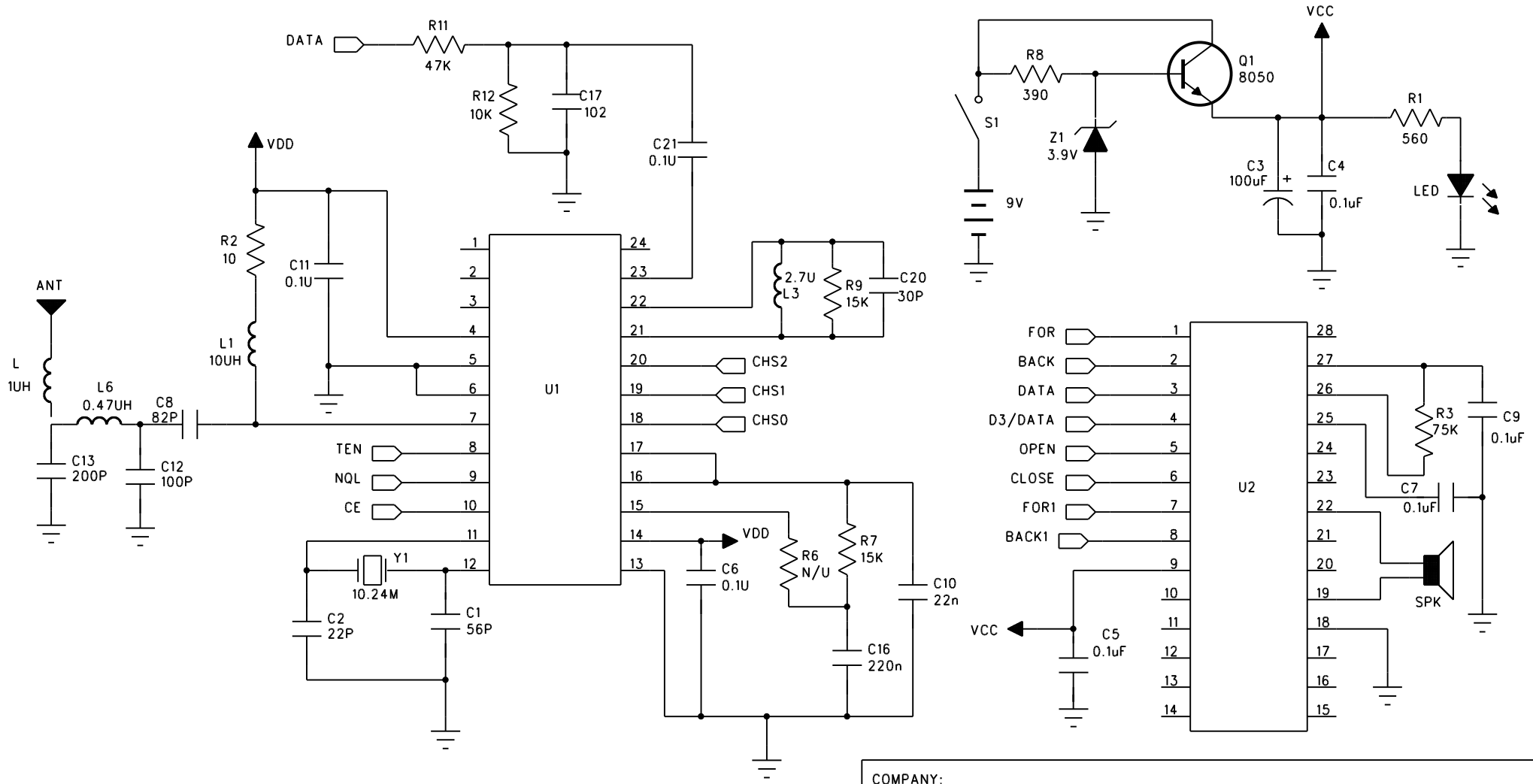

COMPANY: WAH SHING ELECTRONICS CO.LTD	
TITLE: TX (GR,GN,NI)	
DRAWN: X B J	DATED: FEB 28 04
CHECKED: LI C F	DATED:
QUALITY CONTROL:	DATED:
RELEASED:	DATED:

CODE:	SIZE:	DRAWING NO:	REV:
			3
SCALE:		SHEET: OF	

PDF created with FinePrint pdfFactory trial version http://www.pdffactory.com