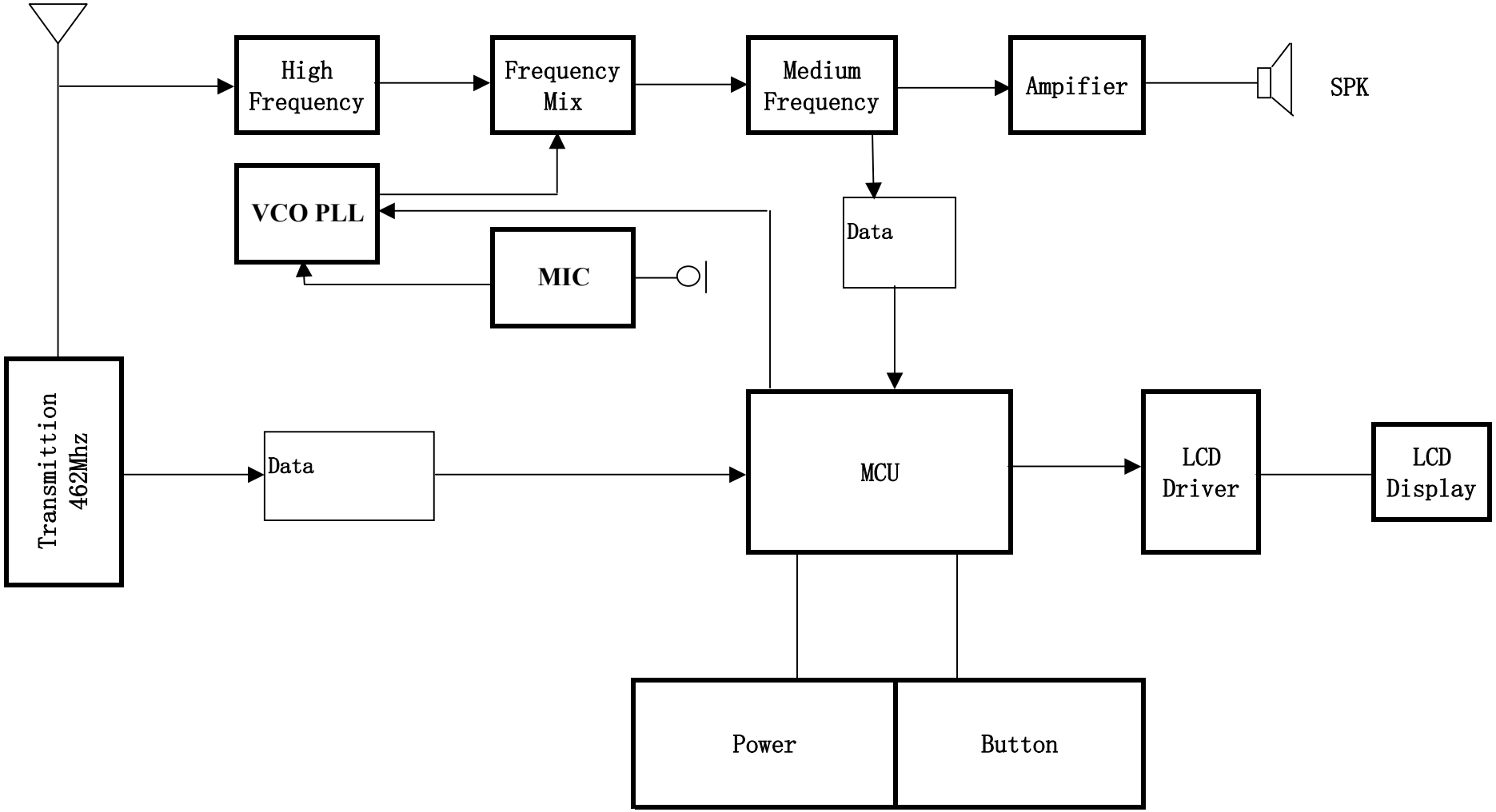
High Frequency
Frequency Mix
Medium Frequency
Ampifier
SPK
VCO PLL
MIC
Data
Transmittion 462Mhz
Data
MCU
LCD Driver
LCD Display
Power
Button