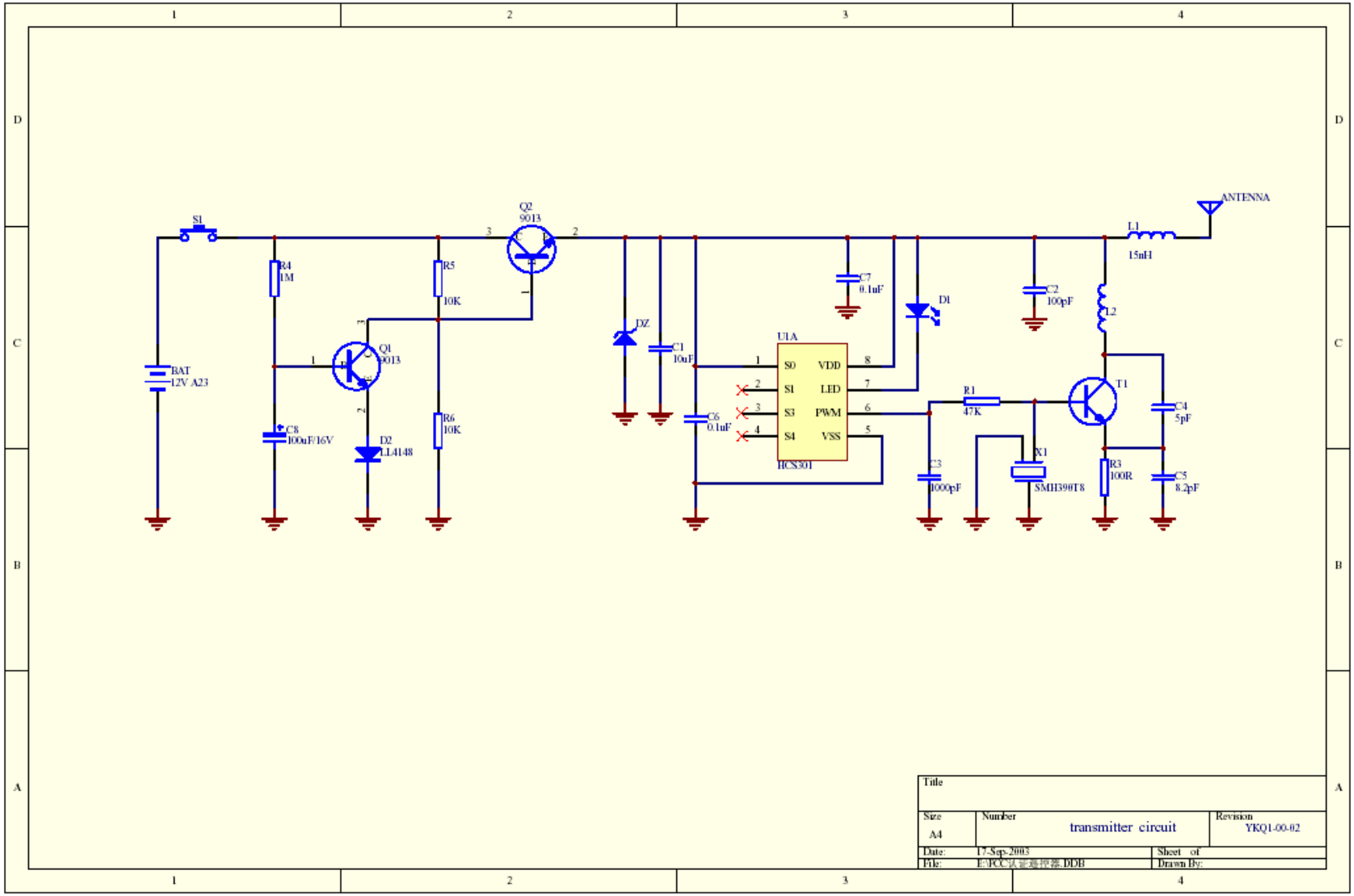Applicant: Sumec Machinery and Electric Manufacturing Co., Ltd.
FCC ID: RH7DT310