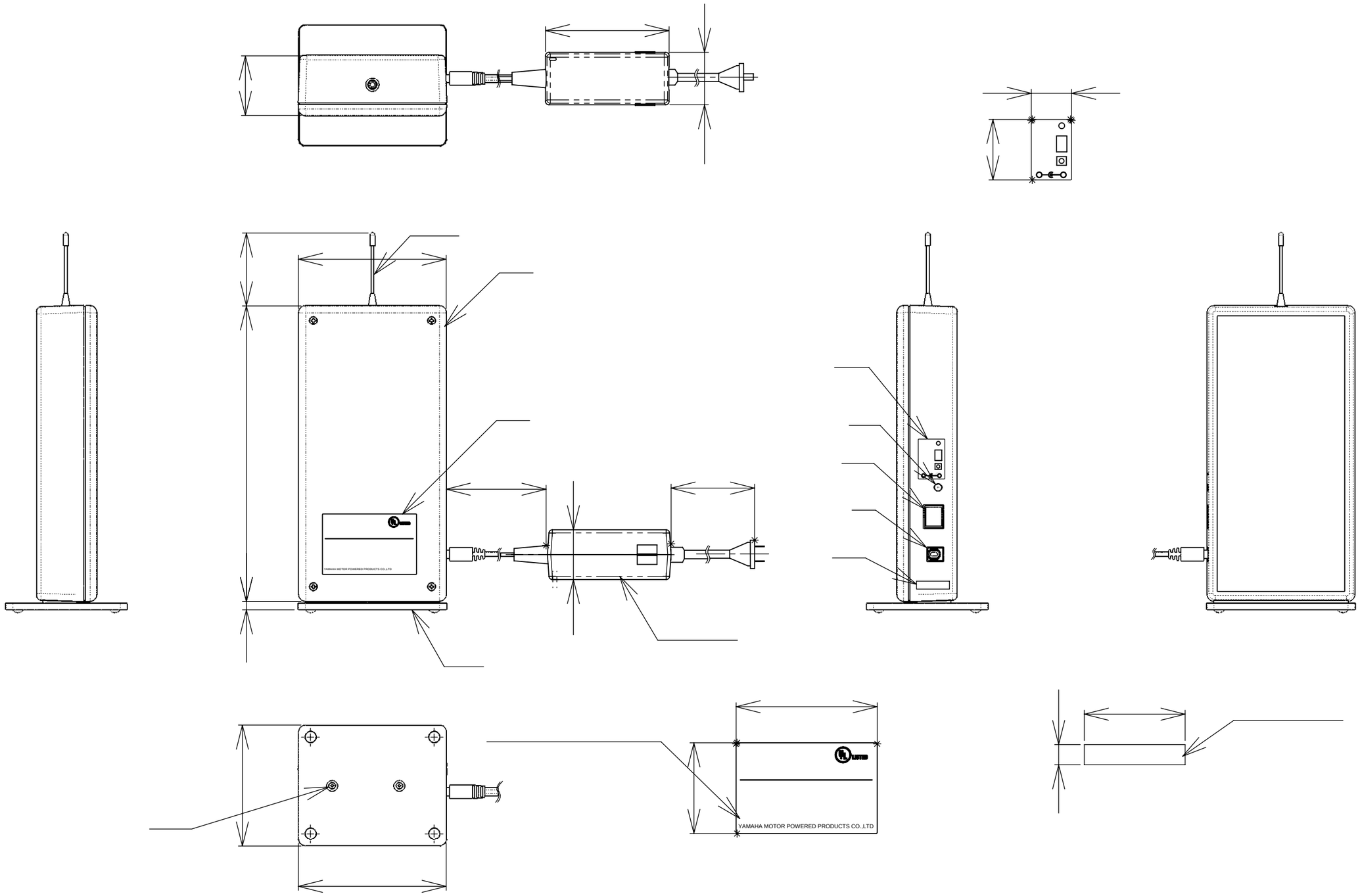

						RXL	O@QS MN		L@SDQH@K%RHYD	PS	EHMHRG		QDL@QJ
	△										O@QS M@LD	@RRDLAKX CQ@VHMF	
	△					092					O@QS MN		
	△						1/0/- 7- 4	1/0/- 7- 4			QDUHRHNM MN		
BNLLDQBH@K SNKDQ@MBD	RXL	C@SD	Q D U H R H N M	RHFMDC	BGDBJDC	RB@KD	CDRHFMDC	CQ@VM	BGDBJDC'O(	BGDBJDC'1(	@OOQNUDC		

'Sghqc `mfkd oqnidbshnm ('IHR @,2(S@SDX@L@ J@F@JT HMC-BN-+KSC-