REV.	DESCRIPTION	APPD.	DATE
A	INITIAL RELEASED	Chen	2024/10/11

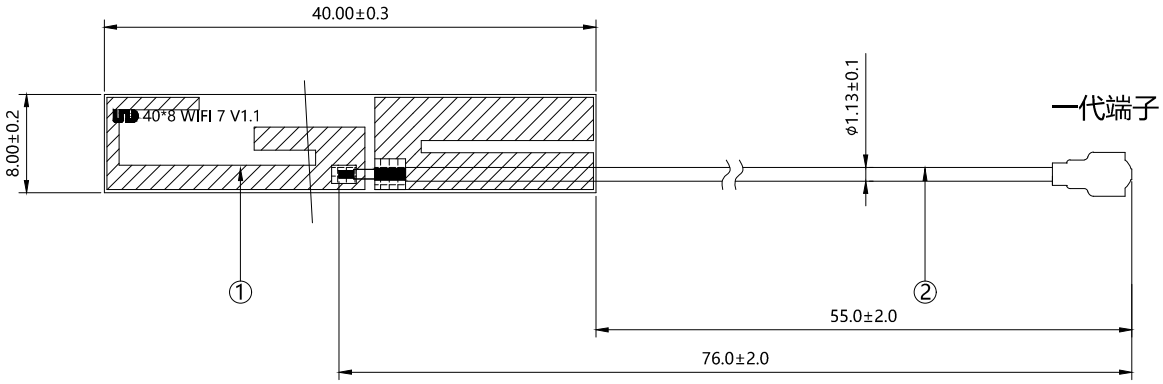

备注:

1.频率范围：2400-2500MHz；4900-7200MHz

2.阻抗:50Ω

3.驻波:≤2.2

4.最大增益:2.89 dBi@2.4G/5.46 dBi@5.8G

5.最大效率:84.25%

6.线焊接后，焊点总高度1.80mm MAX (含离型纸)

7.线极化:线极化

8.温度范围:-30℃- 85℃

9.各零件符合ROHS

确认采用于737-9052产品
陈建斌
2024-11-14

No.	Name	Material	Color	Treatment	Amount	Remark
2	Coaxial Line		Black	Φ1.13*76.0mm	1	
1	FPC		Black	40.0*8.0mm	1	

DIMENSIONS ARE IN MILLIMETERS

UNLESS OTHERWISE SPECIFIED TOLERANCES
ANGLES = ±3°
UP TO 6 = ±0.1
6-40 = ±0.2
40-120 = ±0.6
120-315 = ±1.0
ABOVE 315 = ±1.6

CUS P/N:

PART NO.: M01-0201630R0A

APPD: 陈建斌

CHKD: 陈建斌

DR: 董春玲

MyAntenna

TITLE:

DWG NO.:

SCALE	SHEET	REV.
1:1	1/1	V01

40x8 WIFI 7 Antenna

FEATURES

- 2.80 dBi Peak Gain@2.4G
- 5.46 dBi Peak Gain@5.8G
- Welding RG 1.13 cable, Ipex connector, 3M sticker for easy installation.
- For smart device wireless, Zigbee, Bluetooth terminal

PRODUCTS

Part No.	Weight	Dimensions (L x WxH)	Cables Dimensions	Connector	Color
M01-0201280R0A	0.5	FPC:40.0*8.0*0.2 mm	Φ1.13*110mm	IPEX1	Black

SPECIFICATIONS

PARAMETER	SPECIFICATION	
Frequency Bands, MHz	2400-2500	4900-7200
VSWR (Max)	1.6:1	2.2:1
Peak Gain, dBi (Typ)	Up to2.89 dBi@2.4G/Up to5.46 dBi@5.8G	
Nominal Impedance	50 Ω	
Max Power (ambient temp of 25°C)	10 Watts	
Azimuth Beam Width (deg)	60°	
Polarization	Linear	
Color	Black	
Storage Temperature Range (°C)	-40° C to +85° C	
Operational Temperature Range (°C)	-40° C to +85° C	
Material Substance Compliance	REACH/RoHS Compliant	

MyAntenna RF Technology Co., Ltd
ADD:Room 410, Building A, Fenghuang Zhigu, No. 50 Tiezi Road, Gongle Community, Xixiang Street, Baoan District, Shenzhen
TEL：+86-0755-86503881 E-mail：nfc@imyantenna.com

ELECTRICAL DATA

Return Loss

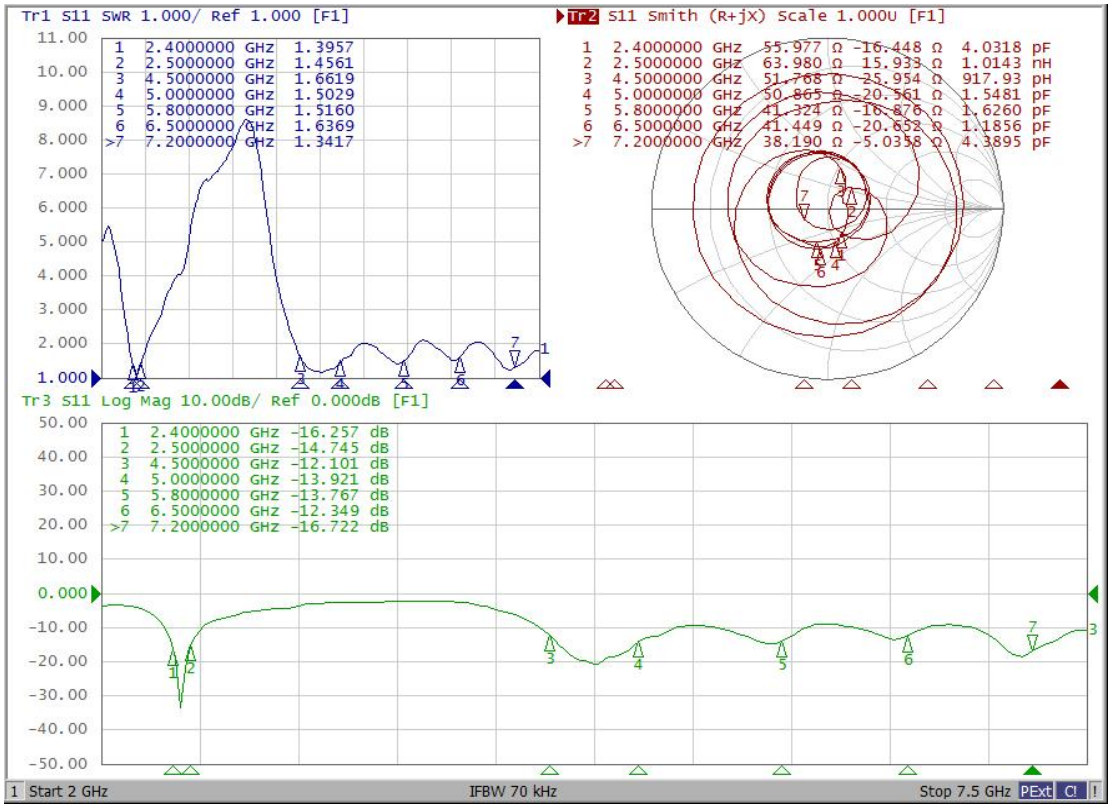

Efficiency（%）

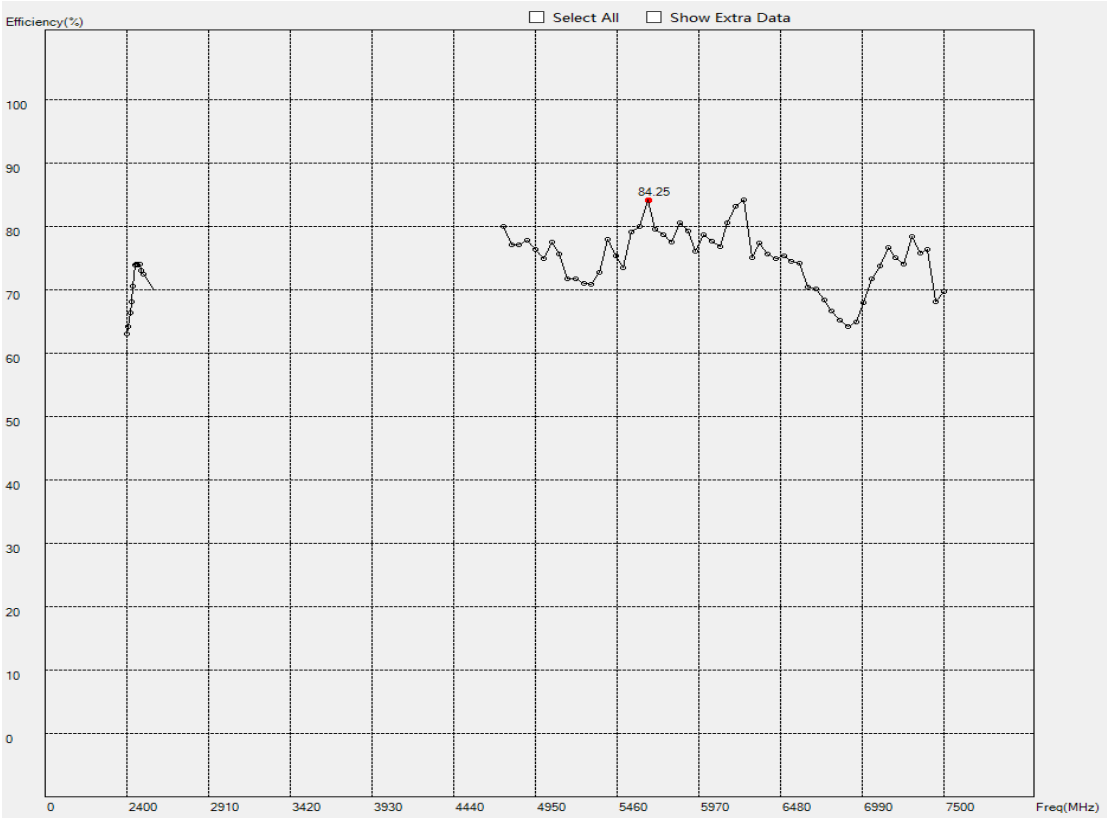

MyAntenna RF Technology Co., Ltd
ADD:Room 410, Building A, Fenghuang Zhigu, No. 50 Tiezi Road, Gongle Community, Xixiang Street, Baoan District, Shenzhen
TEL：+86-0755-86503881 E-mail：nfc@imyantenna.com

Peak Gain（dBi）

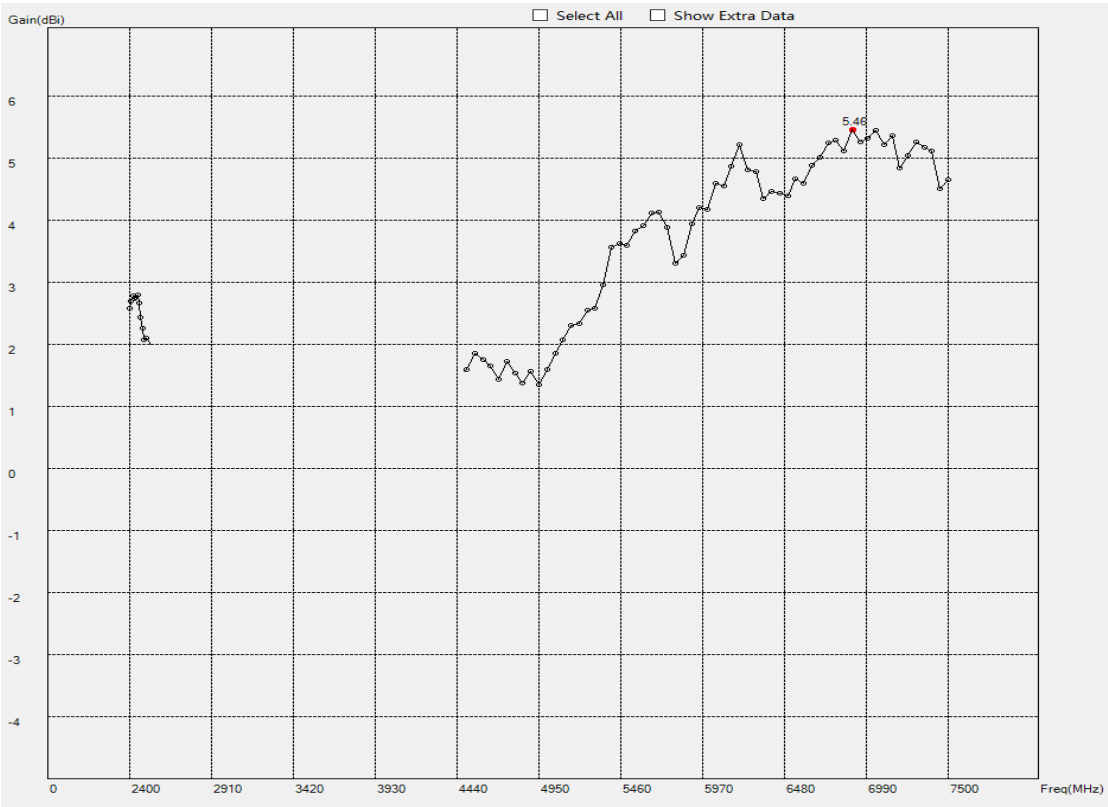

RADIATION PATTERNS

Radiation pattern reference

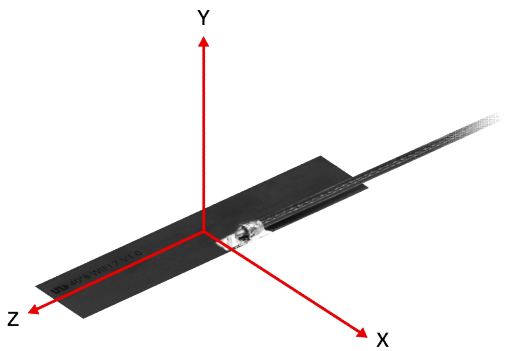

2D Radiation Pattern at 2410MHz/2450MHz/2490MHz

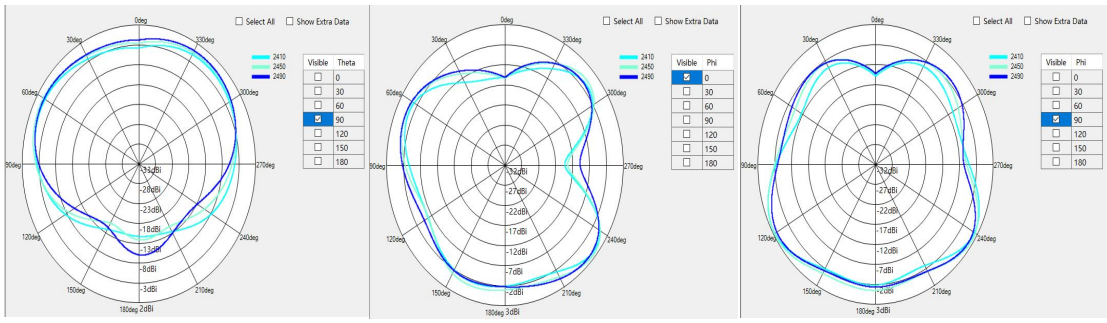

MyAntenna RF Technology Co., Ltd
ADD:Room 410, Building A, Fenghuang Zhigu, No. 50 Tiezi Road, Gongle Community, Xixiang Street, Baoan District, Shenzhen
TEL：+86-0755-86503881 E-mail：nfc@imyantenna.com

2D Radiation Pattern at 4900MHz/5550MHz/5900MHz

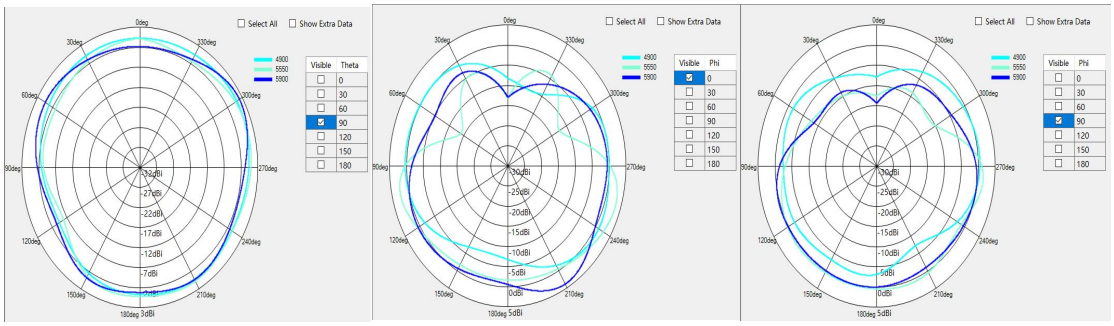

2D Radiation Pattern at 6100MHz/6500MHz/7100MHz

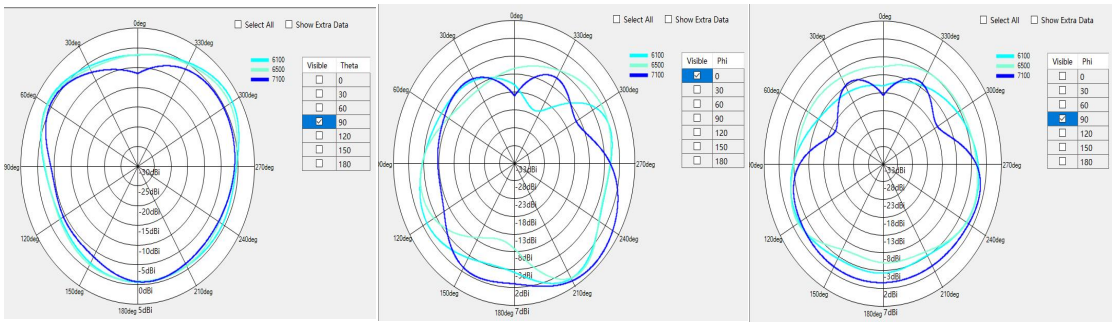

3D Radiation Pattern at 2450MHz Gain=2.8 dBi

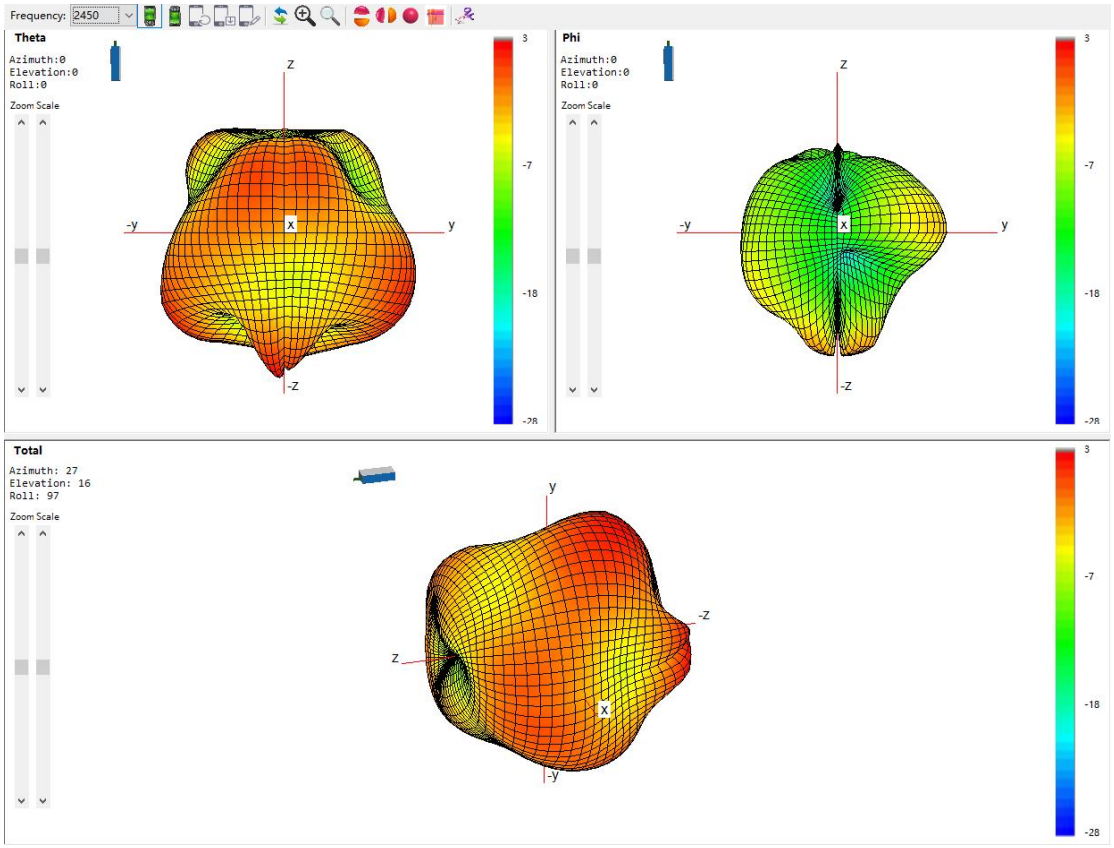

MyAntenna RF Technology Co., Ltd
ADD:Room 410, Building A, Fenghuang Zhigu, No. 50 Tiezi Road, Gongle Community, Xixiang Street, Baoan District, Shenzhen
TEL：+86-0755-86503881 E-mail：nfc@imyantenna.com

3D Radiation Pattern at 5500MHz Gain=3.59 dBi

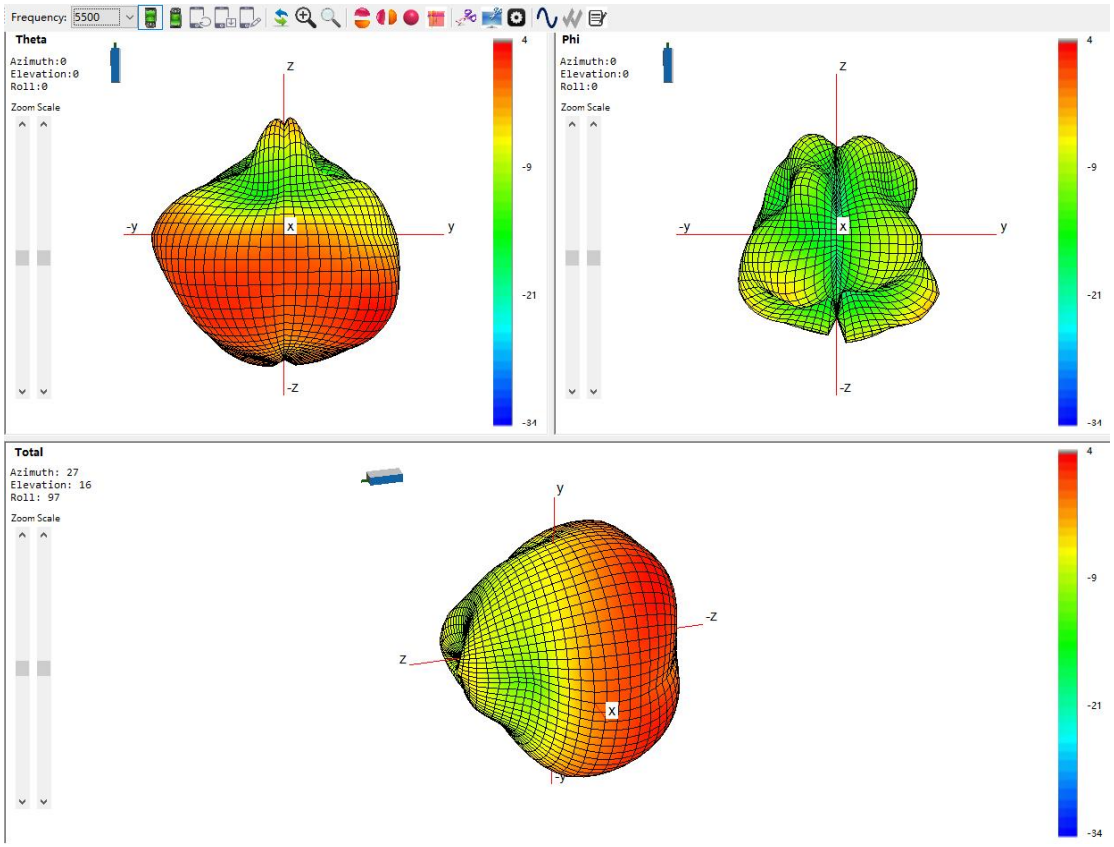

MyAntenna RF Technology Co., Ltd
ADD:Room 410, Building A, Fenghuang Zhigu, No. 50 Tiezi Road, Gongle Community, Xixiang Street, Baoan District, Shenzhen
TEL：+86-0755-86503881 E-mail：nfc@imyantenna.com

3D Radiation Pattern at 6500MHz Gain=4.39 dBi

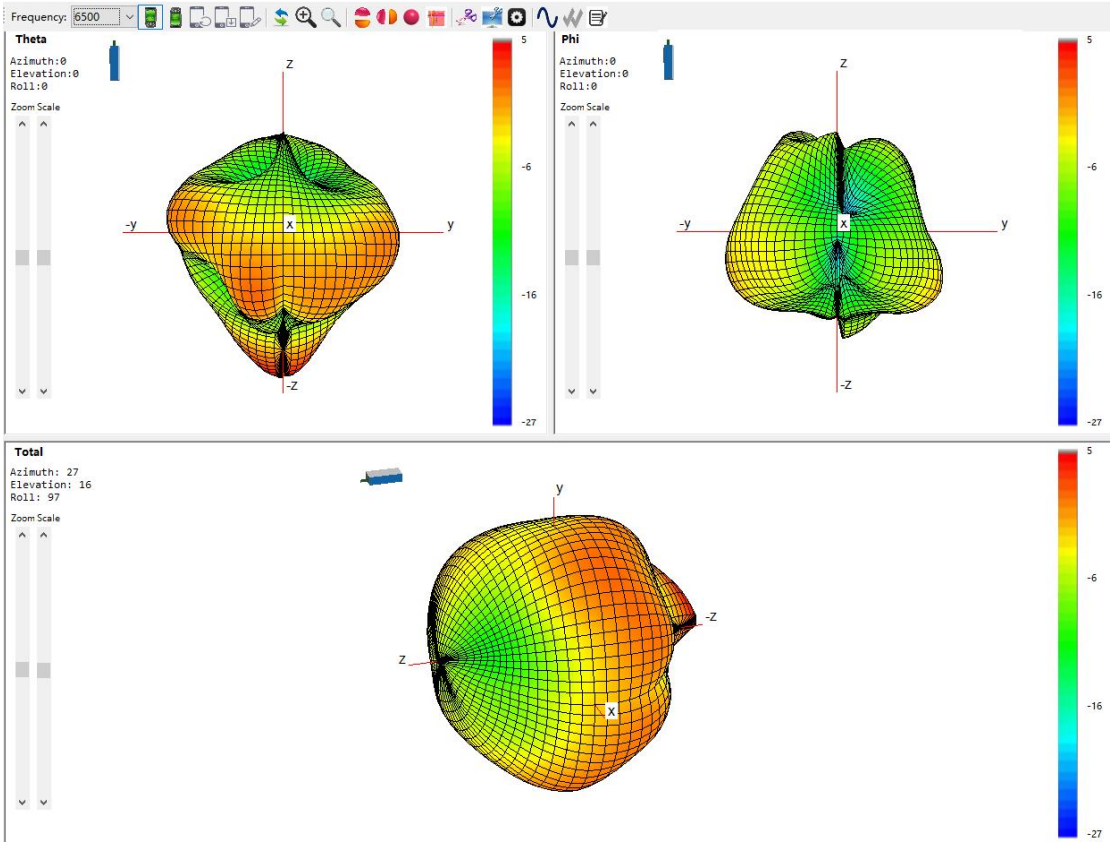

MyAntenna RF Technology Co., Ltd
ADD:Room 410, Building A, Fenghuang Zhigu, No. 50 Tiezi Road, Gongle Community, Xixiang Street, Baoan District, Shenzhen
TEL：+86-0755-86503881 E-mail：nfc@imyantenna.com